SPECIFICATIONS

FOR

SANITARY SEWER DIVERSION

U.S. RT 20 W & CHETLAIN LANE

CITY OF GALENA
101 GREEN STREET
GALENA, IL 61036

NOVEMBER 2017

CONTENTS

	Page #
ADVERTISEMENT FOR BIDS	3
INFORMATION FOR BIDDERS	4
BID DOCUMENT AND BOND	11
AGREEMENT	17
NOTICE OF AWARD	22
NOTICE TO PROCEED	23
PAYMENT AND PERFORMANCE BONDS	24
SUPPLEMENTARY CONDITIONS	32
GENERAL REQUIREMENTS	34
SPECIAL PROVISIONS:	41
WORK CHANGE DIRECTIVE FORM	43
DRAWINGS: 1-11	44

ADVERTISEMENT FOR BIDS

PROJECT:	**SANITARY SEWER DIVERSION: US RT 20 W & CHETLAIN LN**
BID DATE:	**Monday, November 13, 2017**
BID TIME:	**10:00 A.M**.
BIDS RECEIVED BY OWNER:	City of Galena 101 Green Street Galena, IL 61036
BID OPENING:	Sealed bids will be publicly opened and read at City Hall, 101 Green Street, Galena, Illinois.
PROJECT DESCRIPTION:	Diversion of sanitary sewer main: installation of force main through casing; installation of gravity main by horizontal directional drilling and trenching; installation and adjustment of manholes; and site grading.
DOCUMENTS:	Plans, specifications, and bid forms may be obtained and inspected at the City of Galena, 101 Green Street, Galena, IL 61036. They are also available at www.cityofgalena.org under Departments/Engineering/Bid Documents. All contractors who intend to bid the project, must inform the city engineer if they download bid documents so any addenda can be issued.
CONDITIONS:	Bids will be on a total sum basis, segregated bids are not acceptable. Contractors for work under this Bid will obligate Contractor and subcontractors not to discriminate in employment practices.
BID SECURITY:	All bids must be accompanied by a bank draft, cashier's check, certified check, or bid bond payable to the City of Galena for 10 percent of the total amount of the bid.
PREVAILING WAGE:	All work done under this contract is subject to all requirements of the Department of Labor, State of Illinois, and must pay the prevailing wage rate as determined by the Department of Labor and the Owner.
DRUG FREE WORK PLACE	Contractors must comply with the Drug Free Workplace Act (Source: P.A. 86-1459.).

This invitation is given and published pursuant to authorization and direction of the City of Galena. The City of Galena reserves the right to reject any or all Bids or to waive any informalities in the bidding.

By Order of City of Galena, Illinois
Terry Renner, Honorable Mayor

INSTRUCTIONS TO BIDDERS

1. Defined Terms

Terms used in these Instructions to Bidders, which are defined in the standard General Conditions of the Construction Contract, have the meanings assigned to them in the General Conditions. The term "Bidder" means one who submits a Bid directly to the OWNER, as distinct from a sub-bidder, who submits a bid to a Bidder. The term "Successful Bidder" means the lowest, qualified, responsible, and responsive Bidder to whom OWNER (on the basis of OWNERS evaluation as hereinafter provided) makes an award. The term "Bidding Documents" includes the Advertisement or Invitation to Bid, Instructions to Bidders, the Bid Form, and the proposed Contract Documents (including all Addenda issued prior to receipt of Bids).

2. Copies of Bidding Documents

2.1 Complete sets of the Bidding Documents in the number and for the deposit sum, if any, stated in the Advertisement or Invitation to Bid may be obtained from the ENGINEER. The deposit will be refunded to document holders of record who return the Bidding Documents in good condition within thirty days after opening of Bids as stipulated by the Invitation to Bid.

2.2 Complete sets of Bidding Documents must be used in preparing Bids; neither OWNER nor ENGINEER assumes any responsibility for errors or misinterpretations resulting from the use of incomplete sets of Bidding Documents.

2.3 OWNER and ENGINEER in making copies of Bidding Documents available on the above terms do so only for the purpose of obtaining Bids on the Work and do not confer a license or grant for any other use.

3. Qualifications of Bidders

To demonstrate qualifications to perform the Work, each Bidder must be prepared to submit within five days of OWNER'S request written evidence, such as financial data, previous experience, present commitments and other such data a may be called for below or in the supplementary Instructions. Each Bid must contain evidence of Bidder's qualifications to do business in the state where the Project is located or covenant to obtain such qualification prior to award of the contract.

4. Examination of Contract Documents and Site

4.1 It is the responsibility of each Bidder before submitting a Bid, to (a) examine the Contract Documents thoroughly, (b) visit the site to become familiar with local conditions that may affect cost, progress, performance, or federal, state, and local Laws and Regulations that may affect cost, progress, performance, or furnishing of the Work, (c) study and carefully correlate Bidder's observations with the Contract Documents, and (d) notify ENGINEER of all conflicts, errors, or discrepancies in the Contract Documents.

4.2 Reference is made to the supplementary conditions for identification of:

4.2.1. Those reports of exploration and tests of subsurface conditions at the site which have been utilized by ENGINEER in preparation of the Contract Documents. Bidder may rely upon the accuracy of the technical data contained in such reports but not upon non-technical data,

interpretations, or opinions contained therein or for the completeness thereof for the purpose of bidding or construction.

4.2.2. Those drawings of physical conditions in or relating to existing surface and subsurface conditions (except underground Facilities) which are at or contiguous to the site which have been utilized by ENGINEER in preparation of the Contract Documents. Bidder may rely upon the accuracy of the technical data contained in such drawings but not upon the completeness thereof for the purposes of bidding or construction.

OWNER will make copies of such reports and drawings available to any Bidder on request. Those reports and drawings are not part of the Contract Documents, but the technical data contained therein upon which Bidder is entitled to rely as provided in paragraphs 4.2.1 and 4.2.2 are incorporated therein by reference. Such technical data has been identified and established in the Supplementary Conditions.

4.3 Information and data reflected in the Contract Documents with respect to Underground Facilities at or contiguous to the site is based upon information and data furnished to OWNER and ENGINEER by owners of such Underground Facilities, and OWNER does not assume responsibility for the accuracy or completeness thereof unless it is expressly provided otherwise in the Supplementary Conditions.

4.4 Provisions concerning responsibilities for the adequacy of data furnished to prospective Bidders on subsurface conditions, Underground Facilities and other physical conditions, and possible changes in the Contract Documents due to differing conditions appear in paragraph 4.0.2 and 4.0.3 of the General Conditions.

4.5 Before submitting a Bid each Bidder will, at Bidder's own expense, make or obtain any additional examinations, investigations, explorations, tests, and studies and obtain any additional information and data which pertain to the physical conditions (surface, subsurface, and Underground Facilities) at or contiguous to the site or otherwise which may affect cost, progress, performance, or furnishing of the Work and which Bidder deems necessary to determine its bid for performing and furnishing the Work in accordance with the time, price, and other terms and conditions of the Contract Documents.

4.6 On request in advance, OWNER will provide each Bidder access to the site to conduct such explorations and tests as each bidder deems necessary for submission of a Bid. Bidder shall fill all holes, clean up and restore the site to its former condition upon completion of such explorations.

4.7 The lands upon which the Work is to be performed, rights-of-way, and easements for access thereto and other lands designated for use by CONTRACTOR in performing the Work are identified in the Contract Documents. All additional lands and access thereto required for temporary construction facilities or storage of materials and equipment are to be provided by CONTRACTOR. Easements for permanent structures or permanent changes in existing structures are to be obtained and paid for by OWNER unless otherwise provided in the Contract Documents.

4.8 The submission of a Bid will constitute an incontrovertible representation by Bidder that Bidder has complied with every requirement of this Article, that without exception the Bid is premised upon performing and furnishing the Work required by the Contract Documents and such means, methods., techniques, sequences, or procedures of construction as may be indicated in or required by the Contract Documents, and that the Contract Documents are sufficient in scope and detail to indicate and convey understanding of all terms and conditions for performance and furnishing of the Work.

4.9 All inquiries and questions about the contract documents are to be made in writing, preferably by email, sent to Matt Oldenburg – Deputy City Engineer at: mjoldenburg@cityofgalena.org.

5. Interpretations and Addenda

5.1 All questions about the meaning or intent of the Contract Documents are to be directed to ENGINEER. Interpretations or clarifications considered necessary by ENGINEER in response to such questions will be issued by Addenda mailed or delivered to all parties recorded by ENGINEER as having received the Bidding Documents. Questions received less than ten days prior to the date for opening of Bids may not be answered. Only questions answered by formal written Addenda will be binding. Oral and other interpretations or clarifications will be without legal effect.

5.2 Addenda may also be issued to modify the Bidding Documents as deemed advisable by OWNER or ENGINEER.

6. Bid Security

Each Bid must be accompanied by Bid security made payable to OWNER in an amount of **ten percent** of the Bidder's maximum Bid price and in the form of a certified check or bank check or a Bid Bond (on form attached, if a form is prescribed) issued by a surety meeting the requirements of paragraph 5.1 of the General Conditions.

6.2 The Bid security of the successful Bidder will be retained until such Bidder has executed the Agreement and furnished the required contract security, whereupon the Bid security will be returned. If the successful Bidder fails to execute and deliver the Agreement and furnish the required contract security within fifteen days after the Notice of Award, OWNER may annul the Notice of Award and the Bid security of that Bidder will be forfeited. The Bid security of other Bidders whom OWNER believes to have a reasonable chance of receiving the award may be retained by OWNER until the earlier of the seventh day after the Effective Date of the Agreement or the forty-sixth day after the Bid opening, whereupon Bid security furnished by such Bidders will be returned. Bid security with Bids, which are not competitive, will be returned within seven days after the Bid opening.

7. Contract Time

The times for substantial Completion and final completion are set forth in the Agreement. It will be necessary for the successful Bidder to satisfy OWNER of Bidder's ability to achieve substantial completion and final completion within the times designated in the Agreement.

8. Liquidated Damages

Provisions for liquidated damages, if any, are set forth in the Agreement.

9. Substitute or "Or-Equal" Items

The Contract, if awarded, will be on the basis of materials and equipment described in the Drawings or specified in the specifications that a substitute or "or-equal" item of material or equipment may be furnished or used by CONTRACTOR if acceptable to ENGINEER, until after the Effective Date of the Agreement.

10. Subcontractors, Suppliers and Others

10.1 If the Supplementary Conditions require the identity of certain Subcontractors, Suppliers, and other persons and organizations (including those who are to furnish the principal items of material and equipment) to be submitted to OWNER in advance of the specified date prior to the Effective Date of the Agreement, the apparent Successful Bidder, and any other Bidder so requested, shall within seven days after the Bid opening submit to OWNER a list of all such Subcontractors, Suppliers, and other persons and organizations proposed for those portions of the Work for which such identification is required.

Such list shall be accompanied by an experience statement with pertinent information regarding similar projects and other evidence of qualification for each Subcontractor, Supplier, person or organization if requested by OWNER. If OWNER after due investigation has reasonable objection to any proposed Subcontractor, Supplier, other person or organization, either may before the Notice of Award is given request the apparent Successful Bidder to submit an acceptable substitute without any change in Bid price.

If apparent Successful Bidder declines to make any such substitution, OWNER may award contract to the next lower Bidder that proposes to use acceptable Subcontractors, Suppliers, and other persons and organizations. The declining to make requested substitutions will not constitute grounds for sacrificing the Bid security of any Bidder. Any Subcontractor, Supplier, other person or organization listed and to whom OWNER does not make written objection prior to the giving of the Notice of Award will be deemed acceptable to OWNER subject to revocation of such acceptance after the Effective Date of the Agreement as provided in Paragraph 6 of the General Conditions.

10.2 In contracts where the Contract Price is on the basis of Cost-of-the-work Plus a Fee, the apparent Successful Bidder, prior to the Notice of Award, shall identify in writing to OWNER those portions of the Work that such Bidder proposes to subcontract and after the Notice of Award may only subcontract other portions of the Work with OWNER'S written consent.

10.3 No CONTRACTOR shall be required to employ any Subcontractor, Supplier, other person or organization against whom CONTRACTOR has reasonable objection.

11. Bid Form

11.1 The Bid Form is included with the Bidding Documents; additional copies may be obtained from City of Galena.

11.2 All blanks on the Bid Form must be completed in ink or by a typewriter.

11.3 Bids by corporations must be executed in the corporate name by the president or a vice-president (or other corporate officer accompanied by evidence of authority to sign) and the corporate seal must be affixed and attested by the secretary or an assistant secretary. The corporate address and state of incorporation must be shown below the signature.

11.4 Bids by partnerships must be executed in the partnership name and signed by a partner, whose title must appear under the signature and the official address of the partnership must be shown below the signature.

11.5 All names must be typed or printed below the signature.

11.6 The bid shall contain an acknowledgment of receipt of all Addenda (the numbers of which must be filled in on the Bid Form).

11.7 The address and telephone number for communications regarding the Bid must be shown.

12. Submission of Bids

Bids shall be submitted at the time and place indicated in the Advertisement or Invitation to Bid and shall be enclosed in an opaque sealed envelope, marked with the Project title (and, if applicable, the designated portion of the project for which the Bid is submitted) and name and address of the Bidder and accompanied by the Bid security and other required documents. If the Bid is sent through the mail or other delivery system, the sealed envelope shall be enclosed in a separate envelope with the notation "BID ENCLOSED" on the face of it.

13. Modifications and Withdrawal of Bids

13.1 Bids may be modified or withdrawn by an appropriate document duly executed (in the manner that a Bid must be executed) and delivered to the place where Bids are to be submitted at any time prior to the opening of Bids.

13.2 If, within twenty-four hours after Bids are opened, any Bidder files a duly signed, written notice with OWNER and promptly thereafter demonstrates to the reasonable satisfaction of OWNER that there was a material and substantial mistake in the preparation of its Bid, that Bidder may withdraw its Bid and the Bid security will be returned. Thereafter, that Bidder will be disqualified from further bidding on the Work to be provided under the Contract Documents.

14. Opening of Bids

Bids will be opened and (unless obviously non-responsive) read aloud publicly. An abstract of the amounts of the base Bids and major alternates (if any) will be made available to Bidders after the opening of Bids.

15. Bids to Remain Subject to Acceptance

All bids will remain subject to acceptance for forty-five days after the day of the Bid opening, but OWNER may, in its sole discretion, release any Bid and return the Bid security prior to that date.

16. Award of Contact

16.1 OWNER reserves the right to reject any and all Bids, to waive any and all informalities not involving price, time, or changes in the Work and to negotiate contract terms with the Successful Bidder, and the right to disregard all non-conforming, non-responsive, unbalanced, or conditional Bids. Also, OWNER reserves the right to reject the Bid of any Bidder if OWNER believes that it would not be in the best interest of the Project to make an award to that Bidder, whether because the Bid is not responsive or the Bidder is unqualified or of doubtful financial ability or fails to meet any other pertinent standard or criteria established by OWNER. Discrepancies in the multiplication of units of Work and unit prices will be resolved in favor of the unit prices. Discrepancies between the indicated sum of any column of figures and the correct sum thereof will be resolved in favor of the correct sum.

16.2 In evaluating Bids, OWNER will consider the qualifications of the Bidders, whether or not the Bids comply with the prescribed requirements, and such alternates, unit prices, and other data, as may be requested in the Bid Form or prior to the Notice of Award.

16.3 OWNER may consider the qualifications and experience of Subcontractors, Suppliers, and other persons and organizations proposed for those portions of the Work as to which the identity of Subcontractors, Suppliers, and other persons and organizations must be submitted as provided in the Supplementary Conditions. OWNER also may consider the operating costs, maintenance requirements, performance data, and guarantees of major items of materials and equipment proposed for incorporation in the Work when such data is required to be submitted prior to the Notice of Award.

16.4 OWNER may conduct such investigations as OWNER deems necessary to assist in the evaluation of any Bid and to establish the responsibility, qualifications, and financial ability of Bidders, proposed Subcontractors, Suppliers, and other persons and organizations to perform and furnish the Work in accordance with the Contract Documents to OWNER'S satisfaction within the prescribed time.

16.5 If the contract is to be awarded, it will be awarded to the lowest Bidder whose evaluation by OWNER indicates to OWNER that the award will be in the best interests of the Project.

16.6 If the lowest Bid received exceeds the available funding, the OWNER reserves the right to negotiate the deduction of items necessary to meet funding limits with the lowest Bidder prior to award of contract.

16.7 If the contract is to be awarded, OWNER will give the Successful Bidder a Notice of Award within forty-five days after the day of the Bid opening.

17. Contract Security

Paragraph 5.0.1 of the General Conditions and the Supplementary Conditions set forth OWNER'S requirements as to performance and payment Bonds. When the Successful Bidder delivers the executed Agreement to OWNER, it must be accompanied by the required performance and payment Bonds.

18. Signing of Agreement

When OWNER gives a Notice of Award to the Successful Bidder, it will be accompanied by the required number of unsigned counterparts of the Agreement. Within fifteen days thereafter CONTRACTOR shall sign and deliver the required number of counterparts of the Agreement to OWNER with the required Bonds. Within ten days thereafter OWNER shall deliver one fully signed counterpart to CONTRACTOR.

19. Sales and Use Taxes

OWNER is exempt from Illinois State Sales and Use Taxes on materials and equipment to be incorporated in the Work (exemption No. E9996-1725-02). Said taxes shall not be included in the Contract Price. Refer to Supplementary Conditions for additional information.

20. Retainage

Provisions concerning retainage and CONTRACTOR'S rights to deposit securities in lieu of retainage are set forth in the Agreement.

21. Waivers of Lien

CONTRACTORS shall hold OWNER safe and free from all claims and liens and shall deliver to the OWNER waivers of lien and CONTRACTOR'S affidavit, short form, embracing the labor and materials included in payments as requested by the Contractor.

22. Prevailing Wage

All work done under this Contract shall be subject to Illinois laws Relating to Prevailing Wages and Illinois Preference to Citizens on Public Works and Arbitration. Burden for compliance with these laws rests with the contractor.

Effective August 10, 2005 contractors and subcontractors on public works projects must submit certified payroll records on a monthly basis to the public body in charge of the construction project, along with a statement affirming that such records are true and accurate, that the wages paid to each worker are not less than the required prevailing rate and that the contractor is aware that filing records he or she knows to be false is a Class B misdemeanor. Refer also to Section 17 of General Requirements.

Effective January 1, 2010, all contractors shall provide written notice to its subcontractors of their duty to comply with the prevailing wage rate. The contractor shall provide the City with verification of such notice.

23. Drug Free Workplace

All work done under this Contract must comply with the Drug Free Workplace Act
(Source: P.A. 86-1459.).

BID

Project Identification: **SANITARY SEWER DIVERSION: US RT 20 W & CHETLAIN LN**

Contract Identification and Number: **NA**

This Bid is submitted to:

City of Galena
101 Green Street
Galena, IL 61036

1. The undersigned BIDDER proposes and agrees, if this Bid is accepted, to enter into an agreement with owner in the form included in the Contract Documents to perform and furnish all work as specified or indicated in t he Contract Documents for the Contract Price and within the Contract Time indicated in this Bid and in accordance with the other terms and conditions of the Contract Documents.

2. BIDDER accepts all of the terms and conditions of the Advertisement or Invitation to Bid and Instructions to BIDDERS, including without limitation those dealing with the disposition of Bid security. This Bid will remain subject to acceptance for forty-five days after the day of Bid opening. BIDDER WILL SIGN AND SUBMIT THE AGREEMENT with the Bonds and other documents required by the Bidding Requirements within fifteen days after the date of OWNER's Notice of Award.

3. In submitting this Bid, BIDDER represents, as more fully set forth in the Agreement that;

   a. BIDDER has examined copies of all the Bidding Documents and of the following Addenda (receipt of all which is hereby acknowledged):

      Date Number

      _____ _____

   b. BIDDER has familiarized itself with the nature and extent of the Contract Documents, Work, site, locality, and all local conditions and Laws and Regulations that in any manner may affect cost, progress, performance or furnishing of the Work.

   c. BIDDER has studied carefully all reports and drawings of subsurface conditions and drawings of physical conditions which are identified in the Supplementary Conditions as provided in paragraph 4.0.2 of the General Conditions, ands accept the determination set forth in the Supplementary Conditions of the extent of the technical data contained in such reports and drawings upon which BIDDER is entitled to rely.

d. BIDDER has obtained and carefully studied (or assumes responsibility for obtaining and carefully studying) all such examinations, investigations, explorations, tests, and studies (in addition to or to supplement those referred to in (c) above) which pertain to the subsurface or physical conditions at the site or otherwise may affect the Work as BIDDER considers necessary for the performance or furnishing of the Work at the Contract Price, within the Contract Time and in accordance with the other terms and conditions of the Contract Documents, including specifically the provisions of paragraph 4.0.2 of the General Conditions; and no additional

examinations, investigations, explorations, tests, reports or similar information or data are or will be required by BIDDER for such purposes.

e. BIDDER has reviewed and checked all information and data shown or indicated on the Contract Documents with respect to existing Underground Facilities at or contiguous to the site and assumes responsibility for the accurate location of said Underground Facilities. No additional examinations, investigations, explorations, tests, reports or similar information or data in respect of said Underground Facilities are or will be required by BIDDER in order to perform and furnish the Work at the Contract Price, within the Contract Time and in accordance with the other terms and conditions of the Contract Documents, including specifically the provisions of paragraph 4.0.3 of the General Conditions.

f. BIDDER has correlated the results of all such observations, examinations, visits to the site, investigations, explorations, tests, data, reports and studies with the terms and conditions of the Contract Documents.

g. BIDDER has given OWNER written notice of all conflicts, errors or discrepancies that he has discovered in the Contract Documents and the written resolution thereof by ENGINEER is acceptable to BIDDER.

h. The Bid is genuine and not made in the interest of or on behalf of any undisclosed person, firm, or corporation and is not submitted in conformity with any agreement or rules of any group, association, organization, or corporation; BIDDER has not directly or indirectly induced or solicited any other BIDDER to submit a false or sham Bid; BIDDER has not solicited or induced any person, firm, or corporation to refrain from bidding; and BIDDER has not sought by collusion to obtain for itself any advantage over any other BIDDER or over OWNER.

i. Bidder is familiar with and is satisfied as to all federal, state and local laws and Regulations that may affect cost, progress, performance and finishing the work.

4. Bidder will complete work for the costs indicated in the table as follows:

SANITARY SEWER DIVERSION – US RT 20 WEST & CHETLAIN LANE

Item No.	Description	Unit	Qty.	Unit Price	Total Amount
1	Mobilization, staking and insurance	LS	1		
2	Traffic control and access provisions	LS	1		
3	Manhole, Type A, furnish and install	EA	8		
4	Manhole connection to existing at MH-1-19-18	LS	1		
5	4” C-900 Force Main DR-18 with skids, furnish and install through existing 8” pipe as casing and connection to existing force main	LF	150		
6	Modification to MH 34-1 to enable 4” C-900 Force Main to be installed	LS	1		
7	8” C-900 P.V.C. Gravity Main DR-18, furnish and install by horizontal directional drilling between MH 34-1 and MH 31-2	LF	140		
8	8” SDR-26 P.V.C. Gravity Main, furnish and install by trenching	LF	1,632		
9	Turf restoration – 4” minimum depth topsoil	LS	1		
10	Erosion Control, silt fence	LF	1,500		
11	Clearing & Grubbing, up to 6” caliper trees & brush, approx. - 6,000 SF near MH-34-8 and MH 1-19-18	LS	1		
12	Grading and embankment to form cover for area between MH 34-8 and MH 1-19-18 as indicated on drawings – approx. - 500 CY	LS	1		
	Total Base Bid				
A1	Rock excavation	CY	100		
A2	Aggregate surface remove & replace, 10” depth	SY	10		
A3	Bituminous surface remove & replace, 4” depth	SY	10		
A4	Remove & replace sidewalk, 5” depth – match existing	SF	20		
A5	Remove & replace curb & gutter, type B – match existing	LF	10		
A6	Clean fill, furnished and placed	TON	10		
A7	Clean Breaker, CA-1 or CA-3, furnished and placed	TON	10		
A8	Rip Rap, furnished and placed	TON	10		
A9	Temporary Ditch Check	LF	20		
	Total Alternates				

All specific cash allowances are included in the price (s) set forth above and have been computed in accordance with paragraph 11.0.3 of the General Conditions.

5. BIDDER agrees that the Work will be substantially completed and completed and ready for final payment in accordance with paragraphs 14.13 of the General Conditions on or before the dates or within the number of calendar days indicated in the Agreement.

BIDDER accepts the provisions of the Agreement as to liquidated damages in the event of failure to complete the Work on time.

6. The following document is attached to and made a condition of this Bid:

Required Bid security in the form of _____.

7. Communications concerning this Bid shall be addressed to the address of the BIDDER indicated below.

The following address:

_____

_____

8. The terms used in this Bid which are defined in the General Conditions of the Construction Contract included as part of the Contract Documents have the meanings assigned to them in the General Conditions.

Submitted on _____, 20 ____

Respectfully submitted:

_____ _____
Signature

_____ _____
Title

_____ _____
License Number Address
(If Applicable)

_____
Date

(SEAL if BID is by a corporation)

Attest: _____

BID BOND

KNOW ALL MEN BY THESE PRESENTS, that we, the undersigned,

_____ as Principal and

_____as Surety, are

hereby held and firmly bound unto _____ as OWNER

in the penal sum of _____ for the

payment of which, well and truly to be made, we hereby jointly and severally bind ourselves, successors and assigns.

Signed this _____ day of _____, 20 _____.

The Condition of the above obligation is such that whereas

the Principal has submitted to _____

a certain BID, attached hereto and hereby made a part hereof to enter into a contract in writing, for the

_____

_____

_____

NOW, THEREFORE,

a. If said Bid shall be rejected, or

b. If said BID shall be accepted and the Principal shall execute and deliver a contract in the Form of Contract attached hereto (properly completed in accordance with said BID) and shall furnish a BOND for his faithful performance of said contract, and for the payment of all persons performing labor or furnishing materials in connection therewith, and shall in all other respects perform the agreement created by the acceptance of said BID,

then this obligation shall be void, otherwise the same shall remain in force and effect; it being expressly understood and agreed that the liability of the Surety for any and all claims there under shall, in no event, exceed the penal amount of this obligation as herein stated.

The Surety, for value received, hereby stipulates and agrees that the obligations of said Surety and its BOND shall be in no way impaired or affected by any extension of the time within which the OWNER may accept such BID; and said Surety does hereby waive notice of any such extension.

IN WITNESS WHEREOF, the Principal and the Surety have hereunto set their hands and seals, and such of them as are corporations have caused their corporate seals to be hereunto affixed and these presents to be signed by their property officers, the day and year first set forth above.

_____ (Legal Seal)
Principal

_____
Surety

By: _____

IMPORTANT: Surety companies executing BONDS must appear on the Treasury Department's most current list (Circular 570 as amended) and be authorized to transact business in the state where the project is located.

STANDARD FORM OF AGREEMENT
BETWEEN OWNER AND CONTRACTOR
ON THE BASIS OF A STIPULATED PRICE

THIS AGREEMENT is dated as of the _____ in the year **2017** by and between the CITY OF GALENA, Illinois (hereinafter called OWNER) and _____ (hereinafter called CONTRACTOR).

OWNER and CONTRACTOR, in consideration of the mutual covenants hereinafter set forth, agree as follows:

1. Work

CONTRACTOR shall complete all Work as specified or indicated in the Contract Documents. The Work is generally described as follows:

SANITARY SEWER DIVERSION: US RT 20 W & CHETLAIN LN

The project for which the Work under the Contract Documents may be the whole or only a part is generally described as follows:

SANITARY SEWER DIVERSION: US RT 20 W & CHETLAIN LN

2. ENGINEER

The project has been designed by City Engineer, City of Galena who is hereinafter called ENGINEER and who is to act as OWNER'S representative, assume all duties and responsibilities and have the rights and authority assigned to ENGINEER in the Contract Documents in condition with completion of the Work in accordance with the Contract Documents.

3. Contract Time

3.1 The Work will be substantially completed **eight weeks after the commencement date** and completed and ready for final payment in accordance with article 14 of the General Conditions **one week after substantial completion**. **Commencement date will be 20th November 2017. <u>If weather conditions are unsuitable, project completion date will be extended to Spring 2018.</u>**

3.2 <u>Liquidated Damages</u>. OWNER and CONTRACTOR recognize that time is of the essence of this Agreement and the OWNER will suffer financial loss if the work is not completed within the times specified in paragraph 3.1 above, plus any extensions thereof allowed in accordance with Article 12 of the General Conditions. They also recognize the delays, expense and difficulties involved in proving in a legal or arbitration proceeding the actual loss suffered by OWNER if the Work is not completed on time. Accordingly, instead of requiring any such proof, OWNER and CONTRACTOR agree that as liquidated damages for delay (but not as a penalty) CONTRACTOR shall pay OWNER **two hundred dollars ($200.00)** for each day that expires after the time specified in paragraph 3.1 for completion and readiness for final payment.

4. Contract Price

4.1 OWNER shall pay CONTRACTOR for completion of the Work in accordance with the Contract Documents in current funds for the bid price of **$.....**

5. Payment Procedures

CONTRACTOR shall submit Applications for Payment in accordance with Article 14 of the General Conditions. Applications for Payment will be processed by ENGINEER as provided in the General Conditions.

5.1 Progress Payment. OWNER shall make progress payments on account of the Contract Price on the basis of CONTRACTOR'S Applications for Payment as recommended by ENGINEER, on or about the 25th day of each month during construction as provided below. All progress payments will be on the basis of the progress of the Work measured by the schedule of values established in paragraph 2.9 of the General Conditions (and in completed) or, in the event there is no schedule of values, as provided in the General Requirements.

5.1.1 Prior to Substantial Completion, progress payment will be made in an amount equal to the percentage indicated below, but, in each case, less the aggregate of payments previously made and less such amounts as ENGINEER shall determine, or OWNER may withhold:

> 90% of Work completed. If Work has been 80% completed as determined by ENGINEER, and if the character and progress of the Work have been satisfactory to OWNER and ENGINEER, OWNER on recommendation of ENGINEER, may determine that as long as the character and progress of the Work remain satisfactory to them, there will be a reduction in the retainage on the remaining progress payments prior to Substantial Completion in an amount equal to 95% of the Work completed.
>
> 90% of materials and equipment not incorporated in the Work (but delivered, suitably stored and accompanied by documentation satisfactory to OWNER as provided in paragraph 14.0.2 of the General Conditions).

5.1.2 Upon Substantial Completion in an amount sufficient to increase total payment to CONTRACTOR to 95% of the Contract Price, less such amounts as ENGINEER shall determine, or OWNER may withhold, in accordance with paragraph 14.0.7 of the General Conditions.

5.2 Final Payment. Upon final completion and acceptance of the work in accordance with paragraph 14.0.7 of the General Conditions, OWNER shall pay the remainder of the Contract Price as recommended by ENGINEER as provided in said paragraph 14.0.7.

6. Interest

All moneys not paid when due as provided in Article 14 of the General Conditions shall bear interest at the maximum rate allowed by law at the place of the Project.

7. Contractor's Representations

In order to induce OWNER to enter into this Agreement CONTRACTOR makes the following representations.

7.1 CONTRACTOR has familiarized itself with the nature and extent of the Contract Documents, Work, site, locality, and all local conditions and Laws and Regulations that in any manner may affect cost, progress, performance or furnishing of the Work.

7.2 CONTRACTOR has studied carefully all reports of explorations and tests of subsurface conditions and drawings of physical condition which are identified in the Supplementary Conditions and accepts the determination of the extent of the technical data contained in such reports and drawings upon which CONTRACTOR is entitled to reply.

7.3 CONTRACTOR has obtained and carefully studied (or assumes responsibility for obtaining and carefully studying) all such examinations, investigations, explorations, tests, reports and studies (in addition to or to supplement those referred to in paragraph 7.2 above which pertain to the subsurface or physical conditions at or contiguous to the site or otherwise may affect the cost, progress, performance or furnishing of the Work at the Contract Price, within the Contract Time and in accordance with the other terms and conditions of the Contract Documents, including specifically the provisions of paragraph 4.0.2 of the General Conditions; and no additional examinations, investigations, explorations, tests, reports, studies or similar information or data are or will be required by CONTRACTOR for such purposes.

7.4 CONTRACTOR has reviewed and checked all information and data shown or indicated on the Contract Documents with respect to existing Underground Facilities at or contiguous to the site and assumes responsibility for the accurate location of said Underground Facilities. No additional examinations, investigations, explorations, tests, reports, studies or similar information or data in respect of said Underground Facilities are or will be required by CONTRACTOR in order to perform and furnish the Work at the Contract Price, within the Contract Time and in accordance with the other terms and conditions of the Contract Documents.

7.5 CONTRACTOR has correlated the results of all such observations, examinations, investigations, explorations, tests, reports and studies with the terms and conditions of the Contract Documents.

7.6 CONTRACTOR has given ENGINEER written notice of all conflicts, errors or discrepancies that he has discovered in the Contract Documents and the written resolution thereof by ENGINEER is acceptable to CONTRACTOR.

8. Contract Documents

The Contract Documents which comprise the entire agreement between OWNER and CONTRACTOR concerning the Work consist of the following:

8.1 This Agreement.

8.2 Exhibits to this Agreement.

8.3 Performance and Payment Bonds.

8.4 Notice of Award.

8.5 Notice to Proceed.

8.6 General Requirements.

8.7 Supplementary Requirements

8.8 Specifications bearing the title:

SANITARY SEWER DIVERSION: US RT 20 W & CHETLAIN LN

8.9 Drawings, consisting of a cover sheet and sheets numbered 1, inclusive with each sheet bearing the following general title:

SANITARY SEWER DIVERSION: US RT 20 W & CHETLAIN LN

8.10 Addenda number …… through ….. inclusive with each sheet bearing the following general title:

SANITARY SEWER DIVERSION: US RT 20 W & CHETLAIN LN

8.11 CONTRACTOR'S Bid and Bid Security.

8.12 Documentation submitted by CONTRACTOR prior to Notice of Award.

8.13 The following which may be delivered or issued after the Effective Date of the Agreement and are not attached hereto: All Written Amendments and other documents amending, modifying, or supplementing the Contract Documents.

8.14 There are no Contract Documents other than those listed above in this article 8. The Contract Documents may only be amended, modified or supplemented as provided in article 3 of the General Conditions.

9. Miscellaneous

9.1 Terms used in this Agreement which are defined in Article 1 of the General Conditions will have the meanings indicated in the General Conditions.

9.2 No assignment by a party hereto of any rights under or interests in the Contract Documents will be binding on another party hereto without the written consent of the party sought to be bound; and specifically but without limitation moneys that may become due and moneys that are due may not be assigned without such consent (except to the extent that the effect of this restriction may be limited by law), and unless specifically stated to the contrary in written consent to an assignment no assignment will release or discharge the assignor from any duty or responsibility under the Contract Documents.

9.3 OWNER and CONTRACTOR each binds itself, its partners, successors, assigns and legal representatives in respect of all covenants, agreements and obligations contained in the Contract Documents.

IN WITNESS WHEREOF, OWNER and CONTRACTOR have signed this agreement in triplicate. One counterpart each has been delivered to OWNER, CONTRACTOR and ENGINEER. All portions of the Contract Documents have been signed or identified by OWNER and CONTRACTOR or by ENGINEER on their behalf.

This Agreement will be effective **on _____ 2017**.

OWNER	CONTRACTOR
City of Galena	
By _____	By _____
Mayor	
(Corporate Seal)	(Corporate Seal)
Attest _____	Attest _____
Address for giving notices:	Address for giving notices:
City of Galena 101 Green Street Galena, IL 61036	
(If OWNER is a public body, attach evidence of authority to sign and resolution or other documents authorizing execution of Agreement.)	License No. _____ Agent for service of process _____ (If CONTRACTOR is a Corporation, attach evidence of authority to sign.)

NOTICE OF AWARD

Dated:

To:

Address:

OWNER'S Project No.: **N/A**

Project: **SANITARY SEWER DIVERSION: US RT 20 W & CHETLAIN LN**

Contract No: **N/A**

Contract for: **SANITARY SEWER DIVERSION: US RT 20 W & CHETLAIN LN**

* *

You are notified that your Bid dated _____ for the above Contract has been considered. You are the apparent successful bidder and have been awarded a contract for

Base Bid (Indicate total work, alternates or sections of Work awarded)

The Contract Price of your contract is **$.....**

Three copies of each of the proposed Contract Documents accompany this Notice of Award.

You must comply with the following conditions precedent within fifteen days of the date of this Notice of Award, that is by

1. You must deliver to the OWNER three fully executed counterparts of the Agreement.

2. You must deliver with the executed Agreement the Contract Security (Bonds as specified in the Instructions to Bidders (article 17), General Conditions (article 5), and Supplementary Conditions (paragraph SC-1 to 5.6)

3. List other conditions precedent: None.

Failure to comply with these conditions within the time specified will entitle OWNER to consider your bid abandoned, to annul this Notice of Award, and to declare your Bid Security forfeited.

Within ten days after you comply with those conditions, OWNER will return to you one fully signed counterpart of the Agreement.

City of Galena (Owner)

By: _____

(Authorized Signature - Mayor)

NOTICE TO PROCEED

Dated:

To:

Address:

OWNER'S Project No.: **NA**

Project:

SANITARY SEWER DIVERSION: US RT 20 W & CHETLAIN LN

OWNER'S Contract No.: **N/A**

Contract for: **SANITARY SEWER DIVERSION: US RT 20 W & CHETLAIN LN**

* * * *

CONSTRUCTION PAYMENT BOND

Any singular reference to Contractor, Surety, Owner or other party shall be considered plural where applicable.

CONTRACTOR (Name & Address):

_____

_____

SURETY Name and principal
Place of Business)

_____

OWNER:

City of Galena
101 Green Street
Galena, IL 61036

CONSTRUCTION CONTRACT

Date _____

Amount _____

Description (Name and Location)

_____

BOND

Date (Not earlier than Construction Contract Date) _____

Amount $ _____

Modifications to this Bond Form _____

1. The CONTRACTOR and the Surety, jointly and severally; bind themselves, their heirs, executors, administrators, successors and assigns to the OWNER to pay for labor, materials, and equipment furnished for use in the performance of the Construction Contract, which is incorporated herein by reference.

2. With respect to the OWNER, this obligation shall be null and void if the CONTRACTOR:

2.1 Promptly makes payment, directly or indirectly, for all sums due Claimants, and

2.2 Defends, indemnifies, and holds harmless the OWNER from all claims, demands, liens, or suits by any person or entity who furnished labor, materials or equipment for use in the performance of the Construction Contract, provided the OWNER has promptly notified the CONTRACTOR and the Surety (at the address described in paragraph 12) of any claims, demands, liens, or suits and tendered defense of such claims, demands, liens, or suits to the CONTRACTOR and the Surety, and provided there is not owner Default.

3. With respect to Claimants, this obligation shall be null and void if the CONTRACTOR promptly makes payment, directly or indirectly, for all sums due.

4. The Surety shall have no obligation to claimants under this Bond until;

4.1 Claimants who are employed by or have a direct contract with the CONTRACTOR have given notice to the Surety (at the address described in Paragraph 12) and sent a copy, or notice thereof, to the OWNER, stating that a claim is being made under this Bond and, with substantial accuracy, the amount of the claim.

4.2 Claimants who do not have a direct contract with the CONTRACTOR:

4.2.1 Have furnished written notice the CONTRACTOR and sent a copy, or notice thereof, to the OWNER, within 90 days after having last performed labor or last furnished materials or equipment included in the claim stating, with substantial assurance, the amount of the claim and the name of the party to whom the materials were furnished or supplied or for whom the labor was done or performed; and

4.2.2 Have either received a rejection in whole or in part from the CONTRACTOR, or not received within 30 days of furnishing the above notice any communication from the CONTRACTOR by which the CONTRACTOR has indicated the claim will be paid directly or indirectly; and

4.2.3 Not having been paid within the above 30 days, have sent a written notice to the surety (at the address described in Paragraph 12) and sent a copy, or notice thereof, to the OWNER, stating that a claim is being made under this Bond and enclosing a copy of the previous written notice furnished to the CONTRACTOR.

5. If a notice required by Paragraph 4 is given by the OWNER to the CONTRACTOR or to the Surety that is sufficient compliance.

6. When the Claimant has satisfied the conditions of paragraph 4, the Surety shall promptly and at the surety's expense take the following actions:

6.1. Send an answer to the Claimant, with a copy to the OWNER, within 45 days after receipt of the claim, stating the amounts that are undisputed and the basis for challenging any amounts that are disputed.

6.2. Pay or arrange for payment of any undisputed amounts.

7. The Surety's total obligation shall not exceed the amount of this Bond, and the amount of this Bond shall be credited for any payments made in good faith by the Surety.

8. Amounts owed by the OWNER to the CONTRACTOR under the Construction Contract shall be used for the performance of the Construction Contract and to satisfy claims, if any, under any Construction

Performance Bond. By the CONTRACTOR furnishing and the OWNER accepting this Bond, they agree that all funds earned by the CONTRACTOR in the performance of the Construction Contract are dedicated to satisfy obligations of the CONTRACTOR and the Surety under this Bond, subject to the OWNER'S priority to use the fund for the completion of the work.

9. The Surety shall not be liable to the OWNER, Claimants or others for obligations of the CONTRACTOR that are unrelated to the Construction Contract. The OWNER shall not be liable for payment of any costs or expenses of any Claimant under this Bond, and shall have under this Bond no obligations to make payments to, give notices on behalf of, or otherwise have obligations to Claimants under this Bond.

10. The Surety hereby waives notice of any change, including changes of time, to the Construction Contract or to related subcontracts, purchase orders, and other obligations.

11. No suit or action shall be commenced by a Claimant under this Bond other than in a court of competent jurisdiction in the location in which the work or part of the work is located or after the expiration of one year from the date (1) on which the claimant gave the notice required by subparagraph 4.1 or Clause 4.2(iii), or (2) on which the last labor or service was performed by anyone or the last materials or equipment were furnished by anyone under the Construction Contract, whichever of (1) or (2) first occurs. If the provisions of this paragraph are void or prohibited by law, the minimum period of limitation available to sureties as a defense in the jurisdiction of the suit shall be applicable.

12. Notice to the Surety, the OWNER, or the CONTRACTOR shall be mailed or delivered to the address shown on the signature page. Actual receipt of notice by Surety, the OWNER, or the CONTRACTOR, however accomplished, shall be sufficient compliance as of the date received at the address shown on the signature page.

13. When this Bond has been furnished to comply with a statutory or other legal requirement in the location where the construction was to be performed, any provision in this Bond conflicting with said statutory or legal requirement shall be deemed deleted here from and provisions conforming to such statutory or other legal requirement shall be deemed incorporated herein. The intent is that this Bond shall be construed as a statutory bond and not as a common law bond.

14. Upon request by any person or entity appearing to be a potential beneficiary of this Bond, the CONTRACTOR shall promptly furnish a copy of this Bond or shall permit a copy to be made.

15. DEFINITIONS

15.1. Claimant: An individual or entity having a direct contract with the CONTRACTOR or with a subcontractor of the CONTRACTOR to furnish labor, materials, or equipment for use in the performance of the Contract. The intent of this Bond shall be to include without limitation in the terms "labor, materials, or equipment" that part of water, gas, power, light, heat, oil, gasoline, telephone service, or rental equipment used in the Construction Contract, architectural and engineering services required for performance of the work of the CONTRACTOR and the CONTRACTOR'S subcontractors, and all other items for which a mechanic's lien may be asserted in the jurisdiction where the labor, materials, or equipment were furnished.

15.2. Construction Contract: The agreement between the OWNER and the CONTRACTOR identified on the signature page, including all Contract Documents and changes thereto.

15.3. Owner Default: Failure of the OWNER which has neither been remedied nor waived, to pay the CONTRACTOR as required by the Construction Contract or to perform and complete or comply with the other terms thereof.

CONTRACTOR AS PRINCIPAL	SURETY
Company (Corp. Seal)	Company (Corp. Seal)
_____	_____
Signature	Signature:
_____	_____
Name and Title	Name & Title

CONSTRUCTION PERFORMANCE BOND

Any singular reference to Contractor, Surety, Owner or other party shall be considered plural where applicable.

CONTRACTOR	SURETY
_____	_____
_____	_____
_____	_____

OWNER:

City of Galena
101 Green Street
Galena, IL 61036

CONSTRUCTION CONTRACT

Date _____

Amount _____

Description (Name & Location)

_____

BOND

Date (Not earlier than construction contract Date) _____

Amount _____

Modifications to this Bond Form _____

1. The CONTRACTOR and the Surety, jointly and severally, bind themselves, their heirs, executors, administrators, successors and assigns to the OWNER for the performance of the Construction Contract, which is incorporate herein by reference.

2. If the CONTRACTOR performs the Construction Contract, the Surety and the CONTRACTOR shall have no obligation under this Bond, except to participate in conferences as provided in subparagraph 3.1.

3. If there is no Owner Default, the surety's obligation under this Bond shall arise after:

3.1 The OWNER has notified the CONTRACTOR and the Surety at its address described in Paragraph 10 below, that the OWNER is considering declaring a Contractor Default and has requested and attempted

to arrange a conference with the CONTRACTOR and the Surety to be held not later than fifteen days after receipt of such notice to discuss methods of performing the Construction Contract. If the OWNER, the CONTRACTOR, and the Surety agree, the CONTRACTOR shall be allowed a reasonable time to perform the Construction Contract, but such an agreement shall not waive the OWNER'S rights, if any, subsequently to declare a Contractor Default; and

3.2 The OWNER has declared a Contractor Default and formally terminated the CONTRACTOR'S right to complete the contract. Such Contractor Default shall not be declared earlier than twenty days after the CONTRACTOR and the Surety have received notice as provided in Subparagraph 3.1; and

3.3 The OWNER has agreed to pay the Balance of the Contract Price to the Surety in accordance with the terms of the Construction Contract or to a contractor selected to perform the Construction Contract in accordance with the terms of the contract with the OWNER.

4. When the OWNER has satisfied the conditions of Paragraph 3, the Surety shall promptly and at the Surety's expense take one of the following actions:

4.1 Arrange for the CONTRACTOR, with consent of the OWNER, to perform and complete the Construction Contract; or

4.2 Undertake to perform and complete the Construction Contract itself, through its agents or through independent contractors; or

4.3 Obtain bids or negotiated proposals from qualified contractors acceptable to the OWNER for a contract for performance and completion of the Construction Contract, arrange for a contract to be prepared for execution by the OWNER and the contractor selected with the OWNER'S concurrence, to be secured with performance and payment bonds executed by a qualified surety equivalent to the bonds issued on the Construction Contract, and pay to the OWNER the amount of damages as described in Paragraph 6 in excess of the Balance of the Contract Price incurred by the OWNER resulting from the CONTRACTOR'S default; or

4.4 Waive its right to perform and complete, arrange for completion, or obtain a new contractor and with reasonable promptness under the circumstances:

4.4.1 After investigation, determination the amount for which it may be liable to the OWNER and, as soon as practicable after the amount is determined, tender payment therefore to the OWNER; or

4.4.2 Deny liability in whole or in part and notify the OWNER citing reasons therefore.

5. If the Surety does not proceed as provided in Paragraph 4 with reasonable promptness, the Surety shall be deemed to be in default on this Bond fifteen days after receipt of an additional written notice from the OWNER to the Surety demanding that the Surety perform its obligation under this Bond, and the OWNER shall be entitled to enforce any remedy available to the OWNER. If the Surety proceeds as provided in Subparagraph 4.4, and the OWNER refuses the payment tendered or the Surety has denied liability, in whole or in part, without further notice the OWNER shall be entitled to enforce any remedy available to the OWNER.

6. After the OWNER has terminated the CONTRACTOR'S right to complete the Construction Contract, and if the Surety elects to act under Subparagraph 4.1, 4.2 or 4.3 above, then the responsibilities of the Surety to the OWNER shall not be greater than those of the CONTRACTOR under the Construction

Contract, and the responsibilities of the OWNER to the Surety shall not be greater than those of the OWNER under the Construction Contract. To the limit of the amount of this Bond, but subject to commitment by the OWNER of the Balance of the Contract Price to mitigation of costs and damages on the Construction Contract, the Surety is obligated without duplication for:

6.1 The responsibilities of the CONTRACTOR for correction of defective work and completion of the Construction Contract;

6.2 Additional legal, design professional, and delay costs resulting from the Contractor's Default, and resulting from the action or failure to act of the Surety under Paragraph 4; and

6.3 Liquidated damages, or if no liquidated damages are specified in the Construction Contract, actual damages caused by delayed performance or non-performance of the CONTRACTOR.

7. The Surety shall not be liable to the OWNER or others for obligations of the CONTRACTOR that are unrelated to the Construction Contract, and the Balance of the Contract Price shall not be reduced or set off on account of any such unrelated obligations. No right of action shall accrue on this Bond to any person or entity other than the OWNER or its heirs, executors, administrators, or successors.

8. The Surety hereby waives notice of any change, including changes of time, to the Construction Contract or to related subcontracts, purchase orders, and other obligations.

9. Any proceeding, legal or equitable, under this Bond may be instituted in any court of competent jurisdiction in the location in which the work or part of the work is located and shall be instituted within two years after Contractor Default or within two years after the CONTRACTOR ceased working or within two years after the Surety refuses or fails to perform its obligations under this Bond, whichever occurs first. If the provisions of this paragraph are void or prohibited by law, the minimum period of limitation available to sureties as a defense in the jurisdiction of the suit shall be applicable.

10. Notice to the surety, the OWNER, or the CONTRACTOR shall be mailed or delivered to the address shown on the signature page.

11. When this Bond has been furnished to comply with a statutory or other legal requirements in the location where the construction was to be performed, any provision in this Bond conflicting with said statutory or legal requirement shall be deemed deleted here from and provisions conforming to such statutory or other legal requirements shall be deemed incorporated herein. The intent is that this Bond shall be construed as a statutory bond and not as a common law bond.

12. DEFINITIONS

12.1 Balance of the Contract Price: The total amount payable by the OWNER to the CONTRACTOR under the Construction Contract after all proper adjustments have been made, including allowance to the CONTRACTOR of any amounts received or to be received by the OWNER in settlement of insurance or other claims for damages to which the CONTRACTOR is entitled, reduced by all valid and proper payments made to or on behalf of the CONTRACTOR under the Construction Contract.

12.2 Construction Contract: The agreement between the OWNER and the CONTRACTOR identified on the signature page, including all Contract Documents and changes thereto.

12.3 Contractor Default: Failure of the CONTRACTOR, which has neither been remedied nor waived, to perform or otherwise to comply with the term of the Construction Contract.

12.4 Owner Default: Failure of the OWNER; which has neither been remedied nor waived, to pay the CONTRACTOR as required by the Construction Contract or to perform and complete or comply with the other terms thereof.

CONTRACTOR AS PRINCIPAL	SURETY
Company (Corp. Seal)	Company (Corp. Seal)
_____	_____
Signature	Signature
_____	_____
Name and Title	Name and Title

SUPPLEMENTARY CONDITIONS

These Supplementary Conditions amend or supplement the Standard General Conditions of the Construction Contract (No. 1910-8, 1990 Edition) and other provisions of the Contract Documents as indicated below. All provisions which are not so amended or supplemental remain in full force and effect.

SC-1
The terms used in these Supplementary Conditions which are defined in the Standard General Conditions of the Construction Contract (No. 1910-8, 1990 Edition) have the meanings assigned to them in the General Conditions.

SC 5.4
The limits of liability for the insurance required by Paragraph 5.4 of the General Conditions shall provide the following coverage's for not less than the following amounts or greater where required by Laws and Regulations:

5.4.1. and 5.4.2: Workers' Compensation, etc., under Paragraphs 5.4.1 and 5.4.2 of the General Conditions:

(1)	State:	Statutory
(2)	Applicable Federal (e.g., Longshoreman's):	Statutory
(3)	Employer's Liability	Bodily Injury by Accident - $1,000,000 Each Accident Bodily Injury by Disease - $1,000,000 Each Employee Bodily Injury by Disease - $1,000,000 Policy Limit

5.4.3, 5.4.4, and 5.4.5: Contractor's Liability Insurance under Paragraphs 5.4.3 through 5.4.5 of the General Conditions which shall also include completed operations and product liability coverage's:

(1)	General Aggregate (except products-completed operations)	$3,000,000
(2)	Products-Completed Operations Aggregate	$1,000,000
(3)	Personal and Advertising Injury (per person/organization)	$1,000,000
(4)	Each Occurrence (bodily injury and property damage	$1,000,000
(5)	Property Damage Liability insurance will provide explosion, collapse, and underground	Provide X, C, U Standard

coverage's which applicable

(6) Excess Liability:

General Aggregate	$3,000,000
Each Occurrence	$1,000,000

5.4.6: Automobile Liability:

Combined Single Limit (bodily injury and property damage)	$1,000,000 each accident

SC 5.6

Delete Paragraph 5.6 of the General Conditions in its entirety and insert the following in its place.

5.6 CONTRACTOR shall purchase and maintain property insurance upon the Work at the site in the amount of the full replacement cost thereof (subject to such deductible amounts as may be provided in these Supplementary Conditions or required by Laws and Regulations). This insurance shall:

5.6.1 Include the interests of OWNER, CONTRACTOR, Subcontractors, ENGINEER, ENGINEER's Consultants and any other person or entities identified in the Supplementary Conditions, each of whom is deemed to have an insurable interest and shall be listed as an insured or additional insured;

5.6.2 Be written on a Builder's Risk "all-risk" or open peril or special causes of loss policy form that shall at least include insurance for physical loss and damage to the Work, temporary buildings, false work and Work in transit and shall insure against at least the following perils: fire, lightning, extended coverage, theft, vandalism and malicious mischief, earthquake, collapse, debris removal, demolition occasioned by enforcement of Laws and Regulations, water damage, and such other perils as may be specifically required by the Supplementary Conditions.

5.6.3 Include expenses incurred in the repair or replacement of any insured property (including but not limited to fees and charges of engineers and architects);

5.6.4 Cover materials and equipment in transit for incorporation in the Work or stored at the site or at another location that was agreed to in writing by OWNER prior to being incorporated in the Work, provided that such materials and equipment have been included in an Application for Payment recommended by ENGINEER; and

5.6.5 Be maintained in effect until final payment is made unless otherwise agreed to in writing by OWNER, CONTRACTOR and ENGINEER with thirty day's written notice to each other additional insured to whom a certificate of insurance has been issued.

The policies of insurance required to be purchased and maintained by CONTRACTOR in accordance with this paragraph 5.6 shall comply with the requirements of GC-5.8. Revised 7/12/2016

GENERAL REQUIREMENTS

1. Drawings and Specifications

1.1 The intent of the Drawings and Specifications is that the Contractor shall furnish all labor, materials, tools, equipment, and transportation necessary for the lawful and proper execution of the Work in accordance with the latest edition of the **"IDOT Standard Specifications for Road and Bridge Works", "Standard General Conditions of the Construction Contract", "Standard Specifications for Sewer & Water Construction in Illinois" and "City of Galena Specifications"** unless otherwise specified, and all incidental work necessary to complete the Project in an acceptable manner, ready for lawful use, occupancy or operation by the City of Galena.

1.2 Figure dimensions on Drawings shall govern over scale dimensions, and detailed Drawings shall govern over general Drawings. Any discrepancies found between the Drawings and Specifications and site conditions or any inconsistencies or ambiguities in the Drawings or Specifications shall be immediately reported to the City Engineer, in writing, who shall promptly correct such inconsistencies or ambiguities in writing. Work done by the Contractor after his discovery of such discrepancies, inconsistencies or ambiguities shall be done at the Contractor's risk.

2. Materials, Services and Facilities

2.1 It is understood that, except as otherwise specifically stated in the specifications, the Contractor shall provide and pay for all materials, labor, tools, equipment, water, light, power, transportation, supervision, temporary construction of any nature, and all other services and facilities of any nature whatsoever necessary to execute, complete, and deliver the work within the specified time.

2.2 Materials and equipment shall be so stored as to insure the preservation of their quality and fitness for the Work. Stored materials and equipment to be incorporated in the Work shall be located so as to facilitate prompt inspection.

2.3 Manufactured articles, materials and equipment shall be applied, installed, connected, erected, used, cleaned and conditioned as directed by the manufacturer.

2.4 Materials, supplies and equipment shall be in accordance with samples submitted by the Contractor and approved by the Engineer.

2.5 Materials, supplies or equipment to be incorporated into the Work shall not be purchased by the Contractor or the Subcontractor subject to a chattel mortgage or under a conditional sale contract or other agreement by which an interest is retained by the seller.

3. Inspection and Testing

3.1 All materials and equipment used in the construction of the project shall be subject to adequate inspection and testing in accordance with generally accepted standards, and as may be further required and defined in the Contract Documents.

3.2 The Contractor shall provide at his expense the testing and inspection services required by this specification.

3.3 If the specifications, laws, ordinances, rules, regulations or orders of any public authority having jurisdiction require any work to specifically be inspected, tested, or approved by someone other than the Contractor, the Contractor will give the Engineer timely notice of readiness. The Contractor will then furnish the Engineer the required certificates of inspection, testing or approval.

3.4 Inspections, tests or approvals by the Engineer or others shall not relieve the Contractor from his obligations to perform the Work in accordance with the requirements of the Contract Documents.

3.5 The City Engineer and his representatives will at all times have access to the Work. The Contractor will provide proper facilities for such access and observation of the work and also for any inspection, or testing thereof.

3.6 If any Work is covered contrary to the written instructions of the City Engineer it must, if requested by the City Engineer, be uncovered for his observation and replaced at the Contractor's expense.

3.7 If the City Engineer considers it necessary or advisable that covered Work be inspected or tested by others, the Contractor, at the City Engineer's request, will uncover, expose or otherwise make available for observation, inspection or testing as the City Engineer may require, that portion of the Work in question, furnishing all necessary labor, materials, tools, and equipment. If it is found that such Work is defective, the Contractor will bear all the expenses of such uncovering, exposure, observation, inspection and testing and of satisfactory reconstruction. If, however, such Work is not found to be defective, the Contractor will be allowed an increase in the Contract Price or an extension of the Contract Time, or both, directly attributable to such uncovering, exposure, observation, inspection, testing and reconstruction and an appropriate Change Order shall be issued.

4. Surveys, Permits, Regulations

4.1 The Contractor shall hire, at his expense, a licensed surveyor to furnish all boundary surveys and establish all base lines for locating the principal component parts of the Work together with a suitable number of bench marks adjacent to the Work.

4.2 From the information provided, unless otherwise specified, the Contractor shall develop and make all detail surveys needed for construction such as slope stakes, batter boards, stakes for pile locations and other working points, lines, elevations and cut sheets.

4.3 The Contractor shall carefully preserve bench marks, reference points and stakes and, in case of willful or careless destruction’s, he shall be charged with the resulting expense and shall be responsible for any mistakes that may be caused by their unnecessary loss or disturbance.

4.4 Permits and licenses of a temporary nature necessary for the prosecution of the Work shall be secured and paid for by the Contractor. The Contractor shall give all notices and comply with all laws, ordinances, rules and regulations bearing on the conduct of the Work as drawn and specified. If the Contractor observes that the Contract Documents are at variance therewith, he shall promptly notify the City Engineer in writing, and any necessary changes shall be adjusted as provided in "Changes in the Work".

5. Protection of Work, Property and Persons

5.1 The Contractor will be responsible for initiating, maintaining and supervising all safety precautions and programs in connection with the Work. He will take all necessary precautions for the safety of, and will provide the necessary protection to prevent damage, injury or loss to all employees on the Work and other persons who may be affected thereby, all the Work and all materials or equipment to be incorporated therein, whether in storage on or off the site, and other property at the site or adjacent thereto, including trees, shrubs, lawns, walks, pavements, roadways, structures and utilities not designated for removal, relocation or replacement in the course of construction.

5.2 The Contractor will comply with all applicable laws, ordinances, rules, regulations and orders of any public body having jurisdiction. He will erect and maintain, as required by the conditions and progress of the Work, all necessary safeguards for safety and protection. He will notify owners of adjacent utilities when prosecution of the Work may affect them. The Contractor will remedy all damage, injury or loss to any property caused, directly or indirectly, in whole or in part, by the Contractor, any subcontractor or anyone directly or indirectly employed by any of them or anyone for whose acts any of them be liable, except damage or loss attributable to the fault of the Contract Documents or to the acts or omissions of the Owner or the Engineer or anyone employed by either of them or anyone for whose acts either of them may be liable, and not attributable, directly or indirectly, in whole or in part, to the fault or negligence of the Contractor.

5.3 In emergencies affecting the safety of persons or the work or property at the site or adjacent thereto, the Contractor, without special instruction or authorization from the City Engineer or owner, shall act to prevent threatened damage, injury or loss. He will give the City Engineer prompt written notice of any significant changes in the Work or deviations from the specifications caused thereby, and a Change Order shall thereupon be issued covering the changes and deviations involved, provided that such emergency did not arise in whole or in part as a result of any act or omission of Contractor, any of its Subcontractors or any of the persons directly or indirectly employed by any of them.

6. Supervision

6.1 The Contractor will supervise and direct the work. He will be solely responsible for the means, methods, techniques, sequences and procedures of construction. The Contractor will employ and maintain on the Work a qualified supervisor or superintendent who shall have been designated in writing by the Contractor as the Contractor's representative at the site. The supervisor shall have full authority to act on behalf of the Contractor and all communications given to the supervisor shall be as binding as if given to the Contractor. The supervisor shall be present on the site at all times as required to perform adequate supervision and coordination of the Work.

7. Changes in the Work

7.1 The City of Galena may at any time, as the need arises, order changes within the scope of the Work without invalidating the Agreement.

7.2 The City Engineer, also may at any time, by issuing a Field Order, make changes in the details of the Work. The Contractor shall proceed with the performance of any changes in the work so ordered by the Engineer.

8. Correction of Work

8.1 The Contractor shall promptly remove from the premises all work rejected by the City Engineer for failure to comply with the Specifications, whether incorporated in the construction or not, and the Contractor shall promptly replace and re-execute the Work in accordance with the Specifications and without expense to the City of Galena and shall bear the expense of making good all work of other Contractors destroyed or damaged by such removal or replacement.

8.2 All removal and replacement Work shall be done at the Contractor's expense. If the Contractor does not take action to remove such rejected work within ten (10) days after receipt of Written Notice, the City of Galena may remove such Work and store the materials at the expense of the Contractor.

9. Insurance

9.1 The Contractor shall purchase and maintain such insurance as will protect him from claims set forth below which may arise out of or result from the Contractor's execution of the Work, whether such execution be by himself or by any Subcontractor or by anyone directly or indirectly employed by any of them or by anyone for whose acts any of them may be liable:

9.1.2 Claims under Worker's Compensation, disability benefit and other similar employee benefit acts;

9.1.3 Claims for damages because of bodily injury occupational sickness or disease, or death of his employees;

9.1.4 Claims for damages because of bodily injury, sickness or disease, or death of any person other than his employees;

9.1.5 Claims for damages insured by usual personal injury liability coverage which are sustained: (1) by any person as a result of an offense directly or indirectly related to the employment of such person by the Contractor, or (2) by any other person; and

9.1.6 Claims for damages because of injury to or destruction of tangible property, including loss or use resulting there from.

9.2 Certificates of Insurance acceptable to the City of Galena shall be filed with the City of Galena prior to commencement of the Work. These Certificates shall contain a provision that coverage's afforded under the policies will not be canceled unless at least fifteen (15) days prior Written Notice has been given to the City of Galena.

9.3 The Contractor shall procure and maintain, at his own expense, during the Contract Time, liability insurance as hereinafter specified:

9.3.1 Contractor's General Public Liability and Property Damage Insurance including vehicle coverage issued to the Contractor and protecting him from all claims for personal injury, including death, and all claims for destruction of or damage to property, arising out of or in connection with any operations under the Contract Documents, whether such operations be by himself or by any Subcontractor under him, or anyone directly or indirectly employed by the Contractor or by a Subcontractor under him. Refer to Supplementary Conditions for written limits of liability.

9.4 The contractor shall procure and maintain, at his own expense during the Contract Time, in accordance with the provisions of the laws of the state in which the Work is performed, Workmen's

compensation Insurance, including occupational disease provisions for all of his employees at the site of the Project and in case any Work is sublet, the Contractor shall require such Subcontractor similarly to provide Workmen's compensation Insurance, including occupational disease provisions for all of the latter employees unless such employees are covered by the protection afforded by the Contractor. In case any class of employees engaged in hazardous work under this contract at the site of the project is not protected under Workmen's Compensation statute, the Contractor shall provide, and shall cause each subcontractor to provide, adequate and suitable insurance for the protection of his employees not otherwise protected.

9.5 The contractor shall secure, if applicable, "All Risk" type Builder's Risk Insurance for Work to be performed. Unless specifically authorized by the Owner, the amount of such insurance shall not be less than the Contract Price totaled in the Bid. The policy shall cover not less than the losses due to fire, explosion, hail, lightning, vandalism, malicious mischief, wind, collapse, riot, aircraft, and smoke during the Contract Time, and until the Work is accepted by the City of Galena. The policy shall name as the insured the Contractor and the City of Galena

10. Indemnification

10.1 The Contractor will indemnify and hold harmless the City of Galena and their agents and employees from and against all claims, damages, losses and expenses including attorney's fees arising out of or resulting from the performance of the Work, provided that any such claims, damage, loss or expense is attributable to bodily injury, sickness, disease or death, or to injury to or destruction of tangible property including the loss of use resulting there from; and is caused in whole or in part by any negligent or willful act or omission of the Contractor, any subcontractor, anyone directly or indirectly employed by any of them or anyone for whose acts any of them may be liable.

10.2 In any and all claims against the Owner or the Engineer, or any of their agents or employees, by any employee of the Contractor, any Subcontractor, anyone directly or indirectly employed by any of them, or anyone for whose acts of them may be liable, the indemnification obligation shall not be limited in any way by any limitation on the amount or type of damages, compensation or benefits payable by or for the Contractor or any Subcontractor under Workmen's Compensation Acts, Disability Benefit Acts or other employee benefits acts.

10.3 The obligation of the Contractor under this paragraph shall not extend to the liability of the Engineer, his agents or employees arising out of the preparation or approval of maps, Drawings, opinions, reports, surveys, Change Orders, designs or Specifications.

11. Engineer's Authority

11.1 The City Engineer shall act as the City of Galena's representative during the construction period. He shall decide questions which may arise as to quality and acceptability of materials furnished and Work performed. He shall interpret the intent of the Contract Documents in a fair and unbiased manner. The City Engineer will make visits to the site and determine if the Work is proceeding in accordance with the specifications.

12. Guarantee and Security

12.1 The Contractor shall guarantee all materials and equipment furnished and Work performed for a period of one (1) year from the date of Substantial Completion of the system that the completed system is free from all defects due to faulty materials or workmanship and the Contractor shall promptly make such corrections as may be necessary by reason of such defects including the repairs of any damage to other parts of the system resulting from such defects. The Owner will give notice of observed defects with reasonable promptness. In the event that the Contractor should fail to make such repairs, adjustments, or other Work that may be made necessary by such defects, the City of Galena may do so and charge the Contractor the cost thereby incurred.

12.2 A Performance Bond and a Payment Bond, each in the amount of one hundred percent (100%) of the contract price, with a corporate surety approved by the City of Galena, will be required for the faithful performance of the Contract. Attorneys-in-fact who sign Bid Bonds or Payment Bonds and Performance Bonds must file with each Bond a certified and effective dated copy of their power of attorney. Contractor shall guarantee the work for a period of one (1) year from date of final acceptance of the Work and the Performance Bond furnished by Contractor shall run for a like period.

12.3 The Performance Bond and Payment Bond shall be executed prior to construction in penal sums equal to the amount of the Contract Price, conditioned upon the performance by the Contractor of all undertakings, covenants, terms, conditions and agreements of the specifications and upon the prompt payment by the Contractor to all persons supplying labor and materials in the prosecution of the Work provided by the Contract Documents. Such Bonds shall be executed by the Contractor and a corporate bonding company licensed to transact business in the state in which the Work is to be performed and named on the current list of "Surety Companies Acceptable on Federal Bonds" as published in the Treasury Department Circular Number 570, in the amount of the bonds supplied by such surety to not exceed the maximum amount shown for such surety in such publications. The expense of these Bonds shall be borne by the Contractor.

13. Barricades

13.1 The Contractor shall erect barricades as required to protect traffic during the course of work in or along the traveled portion of a street, alley or highway. Approval for placement of barricades shall be obtained from the appropriate authority.

14. Periodic and Final Cleanup

14.1 From time to time or as may be ordered by the City Engineer and immediately after completion of the Work, the Contractor shall at his own expense clean up and remove all refuse and unused materials of any kind resulting from the Work. Upon failure to do so within five (5) working days after receipt of written request from the Owner, the Work may be done by the Owner and the cost thereof be charged to the Contractor. Upon completion of the Work, the Contractor shall remove all his equipment and put the area of the Work in a neat and clean condition and do all other cleaning required to complete the Work in a workmanlike manner, ready for use and satisfactory to the City Engineer and City of Galena.

15. Final Inspection

15.1 A meeting at the job site shall be arranged by the City Engineer for the purpose of Final Inspection. The Contractor's representative(s) in charge of overall field supervision will be required to attend. The purpose of the meeting shall be to determine whether the project is completed to the satisfaction of all parties. Any unsatisfactory items shall be documented in a letter to the Contractor for action. At this time the City of Galena will determine if the said alley will be open, as well as whether the issuance of the Building Occupancy permit will be approved.

16. Additional Work

16.1 All additional work to be in accordance with latest edition of IDOT Standard Specification for Road and Bridge Construction detailed in Section 109. No additional work can be completed without authorization from the City Engineer. Contractor will inform City immediately or within 24 hours of any proposed change to the contract. Payment method will be agreed before additional work is completed and be based on unit prices, agreed lump sum or force account with hours agreed immediately or within 24 hours of proposed work. Force Account Form (see example) detailing the hours for labor and equipment is to be completed and submitted to City for approval within 24 hours of the proposed work being identified. When force account work is completed a breakdown of the labor, equipment and materials costs described in Section 109.04 is to be submitted to the City. No payment for the force account work will be authorized until the breakdown sheet is received and approved.

Revised 7/12/2012

SPECIAL PROVISIONS TO SPECIFICATIONS

These specifications supplement the latest editions of 'Standard Specifications for Water and Sewer Construction in Illinois', 'IDOT Standard Specifications for Road and Bridge Works' and 'Standard General Conditions of the Construction Contract'.

TRAFFIC CONTROL

Contractor shall provide and include for all traffic controls including: signage, barricades, cones, hazard warning lights and traffic control lights to allow safe working during day and night. All traffic control to be in accordance with IDOT Standard Specifications latest edition.

TURF RESTORATION

This item is to include for provision of minimum of 4 inches of topsoil, grass seed, fertilizer and straw mulch. If sufficient topsoil is not recovered from the work site it will be the contractor's responsibility to provide additional topsoil at no extra cost for this item. If the unit cost item is per ton contractor is to provide weight tickets indicating exact quantity of top soil delivered to the site.

EROSION CONTROL

All erosion control is to comply with details indicated in the plans and specifications and also to standards required by Illinois EPA Storm Water Pollution Prevention Plan (SWPPP), if required. Contractor is to be responsible, unless otherwise noted in the contract, for completing SWPPP and all related documentation, including but not limited to Notice of Intent, Daily Inspection Reports, Notice of Completion and all related fees.

ADDITIONAL WORK

All additional work to be in accordance with latest edition of IDOT Standard Specification for Road and Bridge Construction detailed in Section 109. No additional work can be completed without authorization from the City Engineer. Contractor will inform City immediately or within 24 hours of any proposed change to the contract. Payment will be agreed before additional work is completed and be based on unit prices, agreed lump sum or force account with hours agreed immediately or within 24 hours of proposed work. Force Account Form (see example) detailing the hours for labor and equipment is to be completed and submitted to City for approval within 24 hours of the proposed work being identified. When force account work is completed a breakdown of the labor, equipment and materials costs described in Section 109.04 is to be submitted to the City. No payment for the force account work will be authorized until the breakdown sheet is received and approved.

GENERAL NOTES:

1. Unit cost for all new or replacement construction items will include for adjustment of all utilities, including adjusting valve boxes and other utility covers, unless as otherwise stated in the plans and specifications.
2. Unit cost for all new or replacement construction items will include for removal and disposal of all excavated material and site clearance of trees, vegetation and other debris.
3. New construction will match construction of existing surfaces on either side of area to be replaced. Unit cost will include for all saw-cutting of hard surfaces to allow construction to adjacent surfaces.
4. Unit costs will include for all pavement saw-cutting (concrete or HMA) to allow completion of proposed construction.
5. HMA surface course: ½ inch aggregate can be used in place of 3/8 inch aggregate if requested by the contractor.
6. **Contractor is to include all traffic management and control in their unit prices, if not included in quantities.**
7. All ground disturbed during construction will be reinstated to its former condition.
8. Contractor is responsible for coordinating with all utilities regarding underground and overhead cables.
9. **Contractor must provide an insurance certificate when bid is awarded which complies with all requirements specified in Supplementary Conditions, including Builders Risk coverage if deemed appropriate**.
10. Refer also to all construction specifications listed in drawings and specification section of General Requirements.
11. **All inquiries and questions about the contract documents are to be in writing, preferably by email, sent to Matt Oldenburg – Deputy City Engineer at: mjoldenburg@cityofgalena.org**

CITY OF GALENA
WORK CHANGE DIRECTIVE

THIS FORM MUST BE COMPLETED ON SAME DAY AS WORK IS AGREED AND/OR COMPLETED

WORKS ORDER # ……. **DATE:** …….

PROJECT NAME: ……

CONTRACTOR: ……

CONTRACTOR'S REPRESENTATIVE: …….

DESCRIPTION OF EXTRA WORK:

METHOD OF PAYMENT:

PAYMENT METHOD	**CHECK ONE**	**PAYMENT DETAILS (UNIT COSTS, AMOUNT)**
UNIT PRICES		
LUMP SUM		
FORCE ACCOUNT		USE EXTRA WORK ORDER / TIME AND MATERIAL RECORD FORM PER IDOT STANDARD SPECIFICATIONS

ESTIMATED/AGREED CHANGE IN CONTRACT PRICE AND CONTRACT TIME:

CONTRACT PRICE: $ ……..

CONTRACT TIME (DAYS): .....

COMMENTS – ADDITIONAL INFORMATION:

CITY OF GALENA REPRESENTATIVE: CONTRACTORS REPRESENTATIVE

……..……City Engineer

……

Signature and Title Signature and Title

WCR 2/26/10

CITY OF GALENA

SANITARY SEWER DIVERSION:
U.S. RT. 20 WEST & CHETLAIN LANE

IN THE SE 1/4 OF SECTION 11 & SW 1/4 OF SECTION 12, TWP 28 NORTH, RANGE 1 WEST,

RAWLINS TOWNSHIP, GALENA, JO DAVIESS COUNTY, ILLINOIS

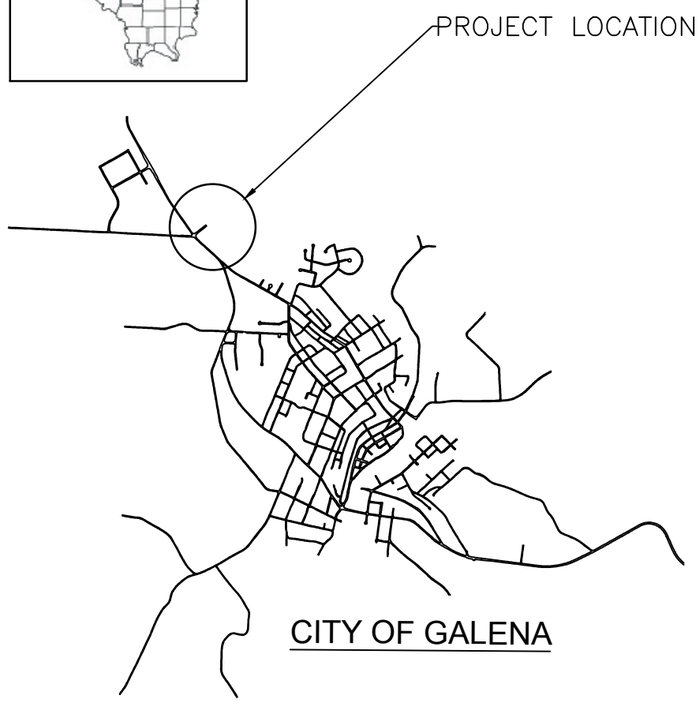

SHEET INDEX

1: COVER SHEET
2: EXISTING & PROPOSED CONDITIONS
3: PLAN VIEW
3E: EROSION CONTROL
4: SPECIFICATIONS
5-7: PLAN & PROFILE
8-10: DETAILS

UTILITIES

GAS
NICOR: 888-642-6748

ELECTRIC
JO CARROLL ELECTRIC: 815-858-2207

TELEPHONE
AT&T: 880-660-3000

WATER & SEWER
CITY OF GALENA: 815-777-1050

CABLE TV
MEDIACOM: 800-332-0245

Call Before You Dig
JULIE
ILLINOIS ONE-CALL SYSTEM

TO OBTAIN LOCATION OF PARTICIPANT'S UNDERGROUND FACILITIES BEFORE YOU DIG IN ILLINOIS, CALL J.U.L.I.E. TOLL FREE 1–800–892–0123.

ILLINOIS STATUTE REQUIRES MIN. OF 3 WORK DAYS NOTICE PRIOR TO EXCAVATING.

NOTE: UTILITY LOCATIONS SHOWN ON PLANS ARE APPROXIMATE AND CONTRACTOR SHALL HAVE APPROPRIATE UTILITY COMPANY MARK EXACT LOCATIONS PRIOR TO COMMENCEMENT OF CONSTRUCTION.

CITY OF GALENA
101 GREEN STREET
GALENA, IL 61036

DRAWN BY: MJO
CHECKED BY: TG, CAL
SCALE: N/A

COVER SHEET

SANITARY SEWER DIVERSION
U.S. 20 & CHETLAIN LANE
GALENA, IL

FILE NO.
SSD2017

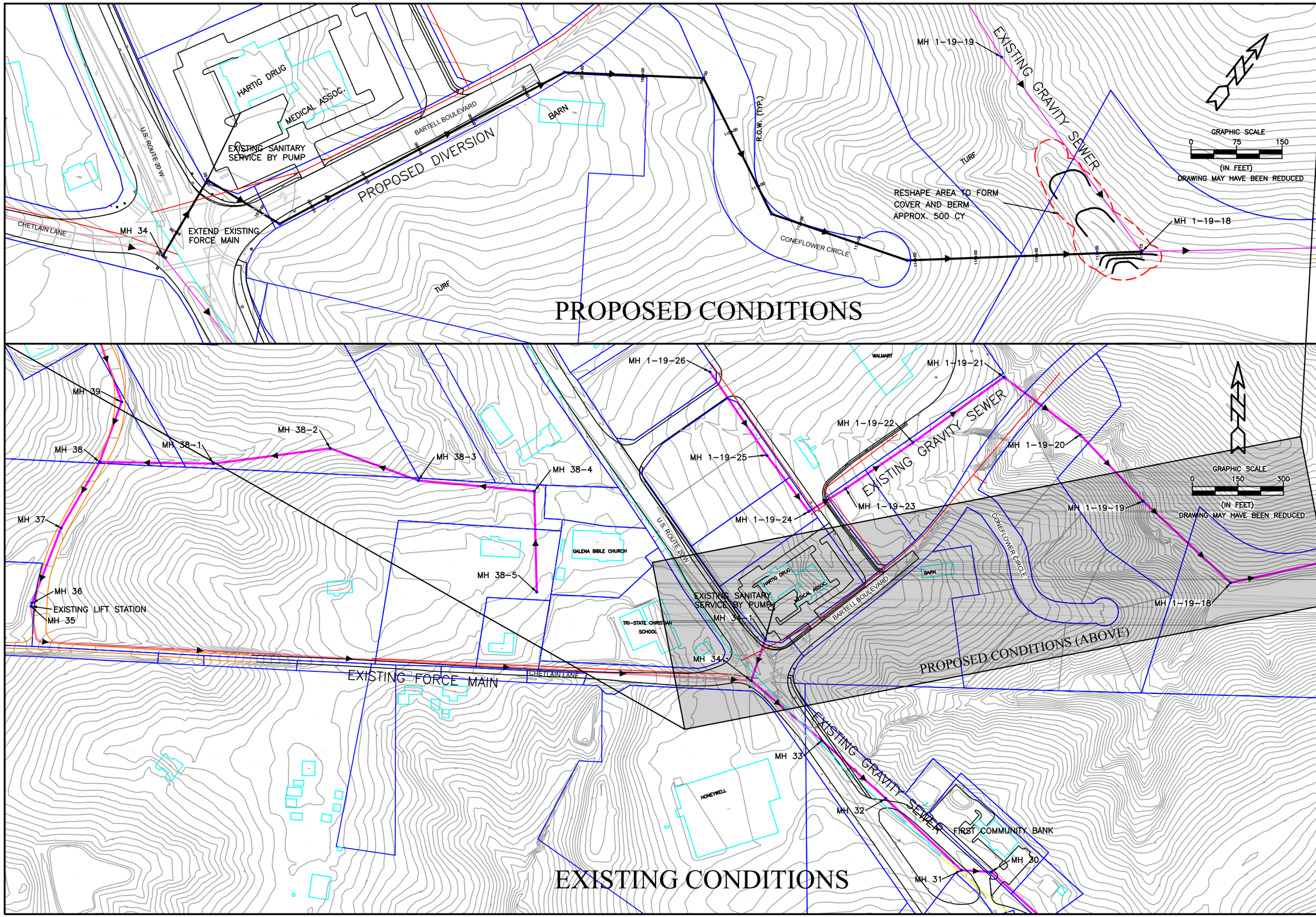

CITY OF GALENA
101 GREEN STREET
GALENA, IL 61036

DRAWN BY: MJO
CHECKED BY: TG, CAL
SCALE: N.T.S.

EXISTING & PROPOSED CONDITIONS

SANITARY SEWER DIVERSION
U.S. 20 & CHETLAIN LANE
GALENA, IL

FILE NO.
SSD2017

SHEET
2 OF 10

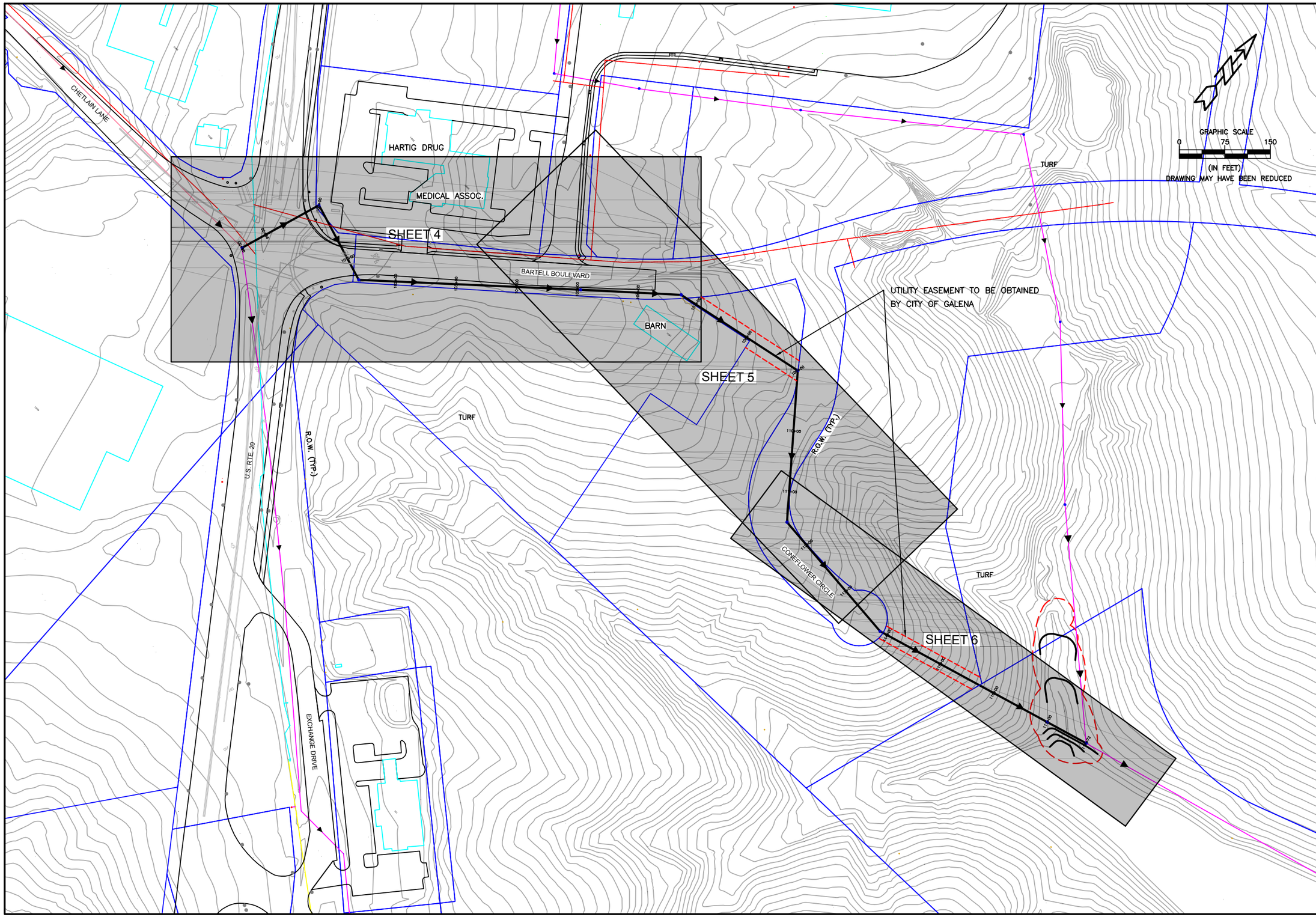

CITY OF GALENA
101 GREEN STREET
GALENA, IL 61036

DRAWN BY: MJO
CHECKED BY: TG, CAL
SCALE: 1"=150'

PLAN VIEW

SANITARY SEWER DIVERSION
U.S. 20 & CHETLAIN LANE
GALENA, IL

FILE NO.
SSD2017

SHEET
3 OF 10

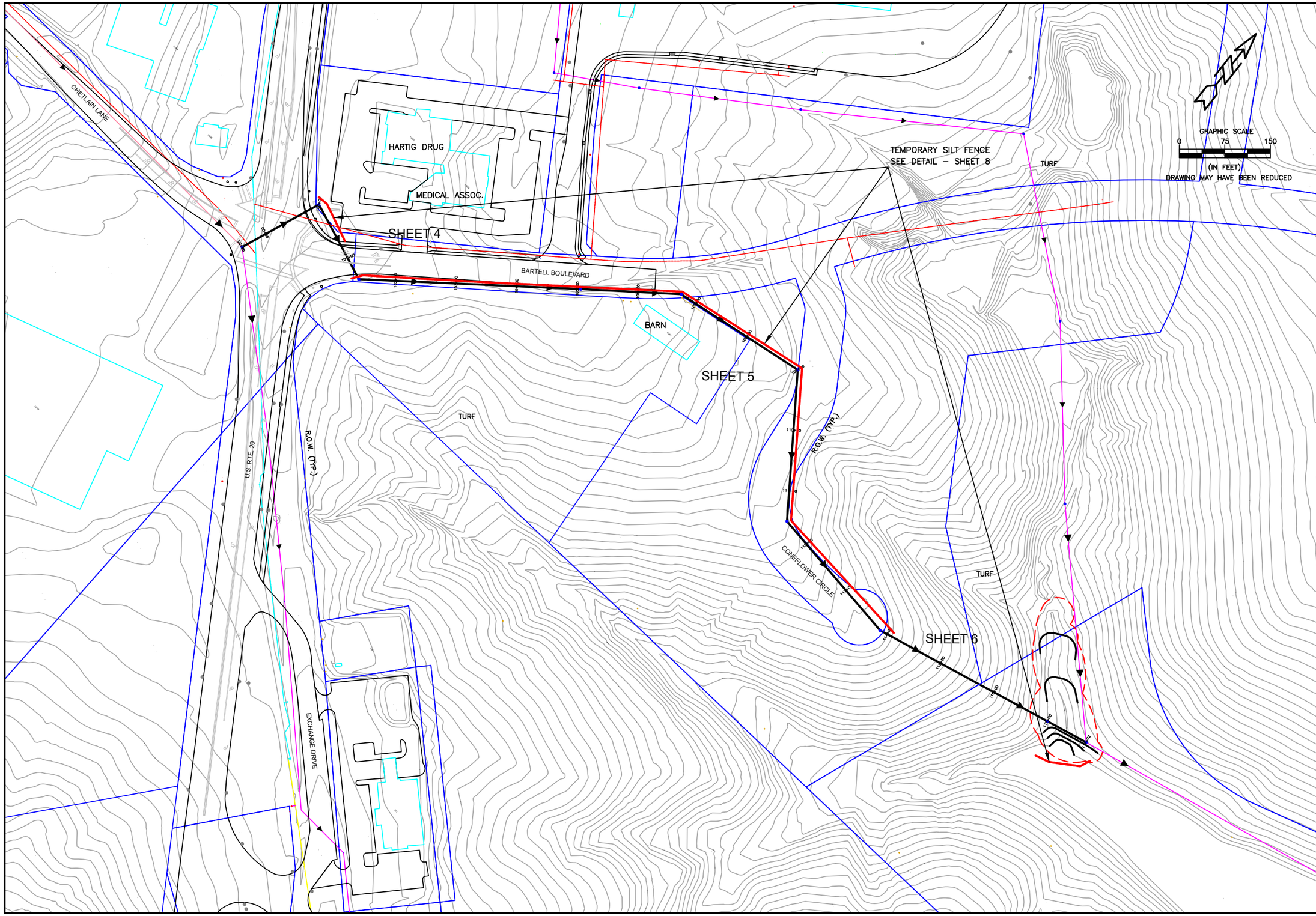

CITY OF GALENA
101 GREEN STREET
GALENA, IL 61036

DRAWN BY: MJO
CHECKED BY: TG, CAL
SCALE: 1"=150'

TEMPORARY EROSION CONTROL

SANITARY SEWER DIVERSION
U.S. 20 & CHETLAIN LANE
GALENA, IL

FILE NO.
SSD2017

SHEET
3E

SANITARY SEWER CONSTRUCTION

Minimum Bedding – For PVC, 4" below pipe to 12" above the top of pipe. Bedding shall be of grade #7, 8, or 9 course aggregate (1/4" to ¾" crushed stone ASSTM D443- size 67).

Selected Granular Material – It shall be required for all sewer trenches lying under existing or proposed street, driveway or sidewalk and within 24" thereof. The backfill material shall be filled to the top of the trench with crushed limestone FA-6 or CA-6 as approved by the City of Galena Engineer.

Manholes – Shall have 4" of stone bedding. The joints shall have an "O" ring or preformed bituminous plastic gasket with inert material filler similar to Ram-nek to provide a water tight seal.

Water-stop Gaskets – Shall be provided at all sanitary sewer manhole connections (flexible pipe to manhole wall connectors ASTM C-923). Such gaskets shall be in accordance with manufacturer's specifications for the type of pipe used.

Pipe Material – Shall not change between manholes.

Repair Sleeves – Shall not be used to make closures during new construction.

TESTING

Low Pressure Air Testing – Each section of main shall be properly plugged at each manhole and pumped up to 4 psi. The section is then allowed to stabilize for two minutes. Once 4 psi is stabilized, the pump must be removed from the site and timing is started. Each section is required to hold this pressure and not lose more than 1 psi in the time designated in the air test table. Time is based on the length and diameter of the pipe. In the event of excessive pressure loss, the section being tested fails and the source of the pressure loss must be located and repaired, the entire section must be retested. Air testing techniques shall be in accordance with the latest ASTM standard practice for testing sewer lines by low-pressure air test method for the appropriate pipe material, except that the time shall not be less than shown in the following air test table.

Deflection Test – In addition to pressure testing, a deflection test is required. A mandrel must be pulled from manhole to manhole to test each section of main. The outside diameter of the test mandrel shall be 95% of the original inside diameter of the pipe being tested. If a section should fail, the contractor shall excavate, repair/replace and retest. The tests must take place in the presence of a representative.

Video (If requested by the City) – Sanitary sewers may be videoed no sooner than 30 days after the sewer has been backfilled. Sewer length between manholes, service locations, and any noted deficiencies are to be noted on the video's audio and on a written report.

ACCEPTABLE MATERIALS

Polyvinyl Chloride Pipe (PVC) – with ASTM-3034 SDR-26 (or SDR-35 with City of Galena Engineer approval) for gravity lines or C-900 with elastomeric joints for a force main.

Services – Shall be 6-inch Schedule 35 PVC

Cleanouts – Shall be installed within 10 feet of the outside of the foundation or according to the State Code and at 80 feet intervals thereafter to the main.

Manholes – Precast reinforced per ASTM C478 minimum of 48" diameter for pipe 24" or less and 60" diameter for 27"-42".

Manhole frames and covers – ASTM A48 with recessed pick holes and "Sanitary" printed on lid; Neenah R1712 machined horizontal bearing surfaces and self-sealing gasketed lid. Cretex manhole chimney seal or approved equal may be installed.

Manhole steps – Plastic coated steel steps, spaced on 12" or 16" centers. The maximum distance to the first step shall be 18".

Precast adjusting rings – To a maximum of 8" must be used to set frames to finished grades.

Joints – Polyvinyl Chloride (PVC) shall be flexible elastomeric seals per ASTM D3212. Ductile iron shall have mechanical or rubber ring (slip seal or push on) joints.

Fittings – Unless otherwise specified, tee fittings shall be provided in the sanitary sewer main for service connections; a log of all tee fitting locations shall be kept by the contractor during installation and one copy of the as-builts shall be turned over to the City of Galena Engineer prior to acceptance of the finished project. Tees shall be 6" inside diameter and the same material as the pipe. Material joining the fitting to the pipe shall be free from cracks and shall adhere tightly to each joining surface.

AIR TEST TABLE:

Length	4"	6"	8"		Length	4"	6"	8"
25	0:04	0:10	0:18		200	0:35	1:19	2:21
50	0:09	0:20	0:35		225	0:40	1:29	2:38
75	0:13	0:30	0:53		250	0:44	1:39	2:56
100	0:18	0:40	1:10		275	0:48	1:49	3:14
125	0:22	0:50	1:28		300	0:53	1:59	3:31
150	0:26	0:59	1:46		350	1:02	2:19	3:47
175	0:31	1:09	2:03		400	1:10	2:38	4:00
	TIME (min:sec)					TIME (min:sec)		

CITY OF GALENA
101 GREEN STREET
GALENA, IL 61036

DRAWN BY: MJO
CHECKED BY: TG, CAL
SCALE: N/A

SPECIFICATIONS

SANITARY SEWER DIVERSION
U.S. 20 & CHETLAIN LANE
GALENA, IL

FILE NO.
SSD2017

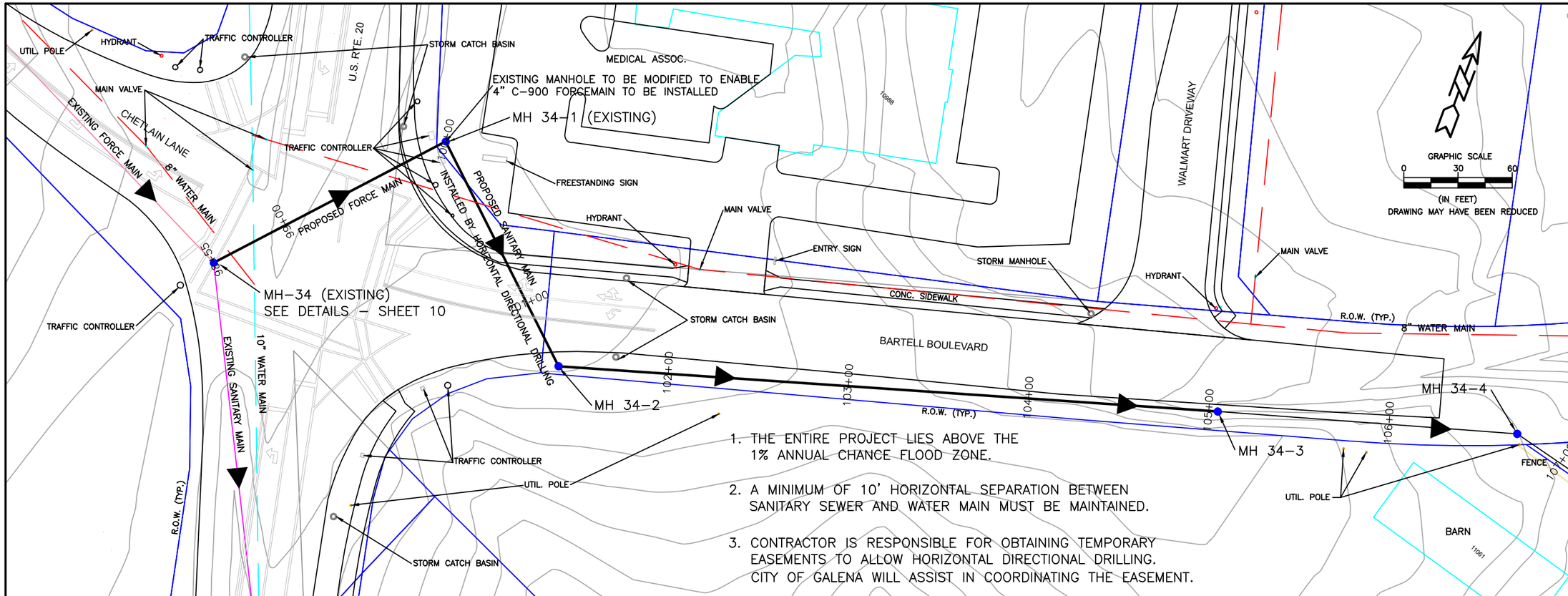

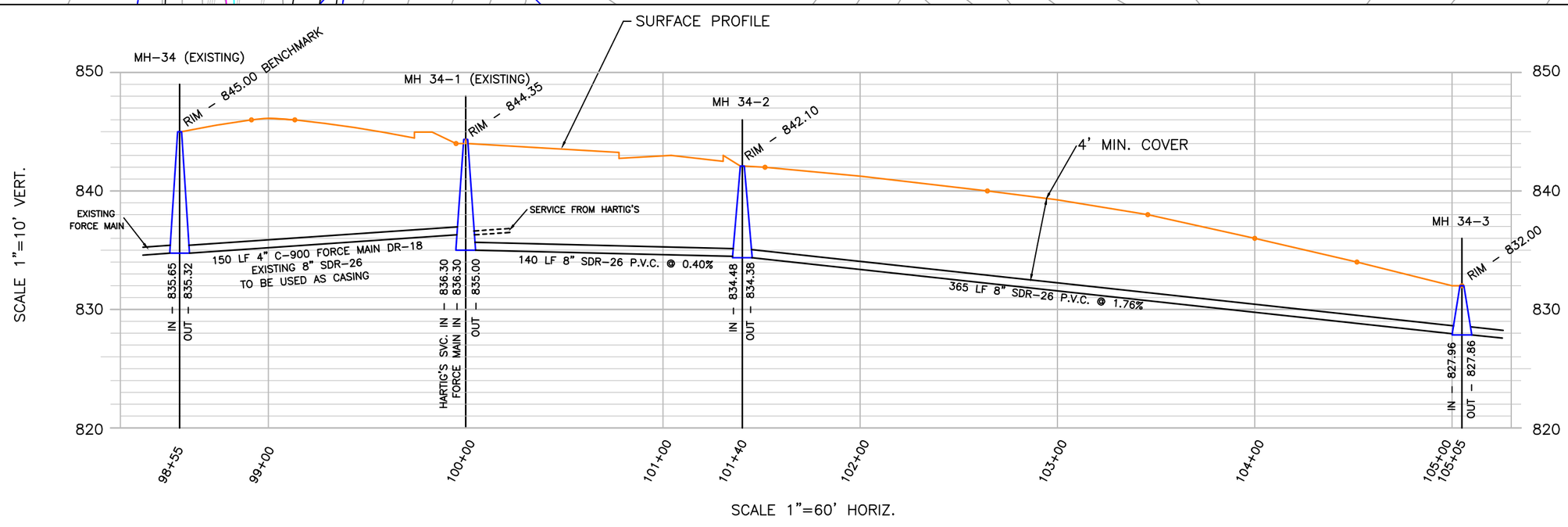

CITY OF GALENA
101 GREEN STREET
GALENA, IL 61036

DRAWN BY: MJO
CHECKED BY: TG, CAL
SCALE: 1"=60'

PLAN & PROFILE

SANITARY SEWER DIVERSION
U.S. 20 & CHETLAIN LANE
GALENA, IL

FILE NO.
SSD2017

SHEET
5 OF 10

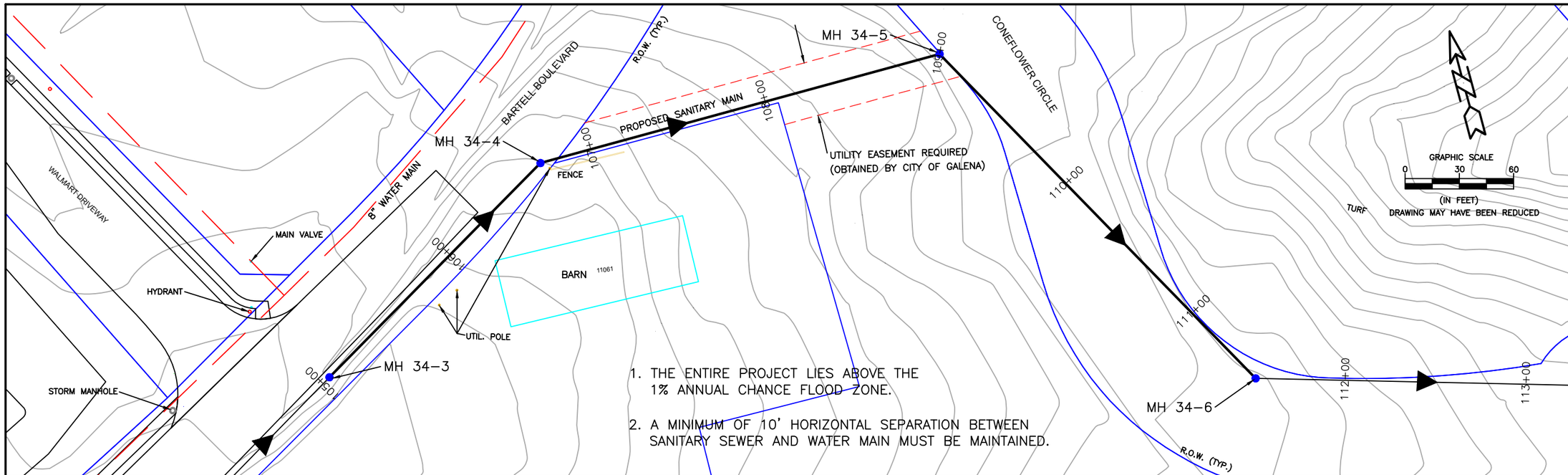

1. THE ENTIRE PROJECT LIES ABOVE THE 1% ANNUAL CHANCE FLOOD ZONE.
2. A MINIMUM OF 10' HORIZONTAL SEPARATION BETWEEN SANITARY SEWER AND WATER MAIN MUST BE MAINTAINED.

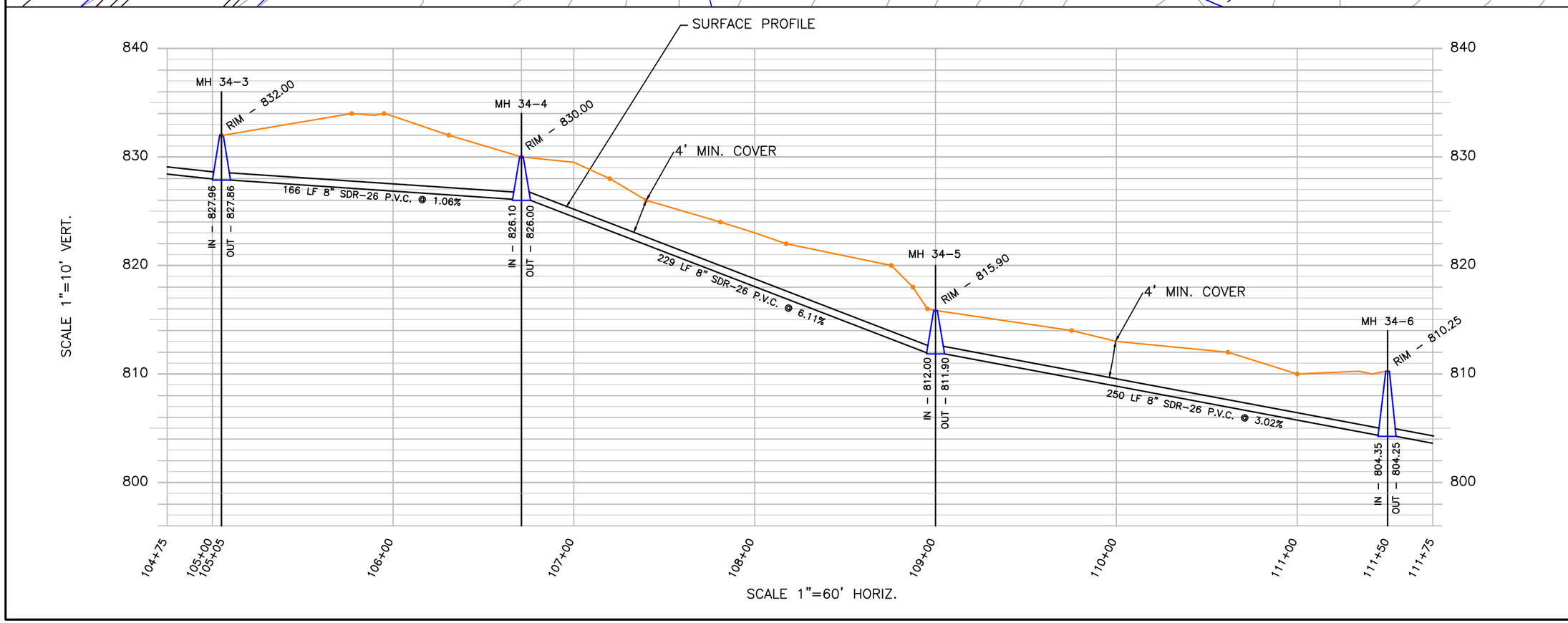

CITY OF GALENA
101 GREEN STREET
GALENA, IL 61036

DRAWN BY: MJO
CHECKED BY: TG, CAL
SCALE: 1"=60'

PLAN & PROFILE

SANITARY SEWER DIVERSION
U.S. 20 & CHETLAIN LANE
GALENA, IL

FILE NO.
SSD2017

SHEET
6 OF 10

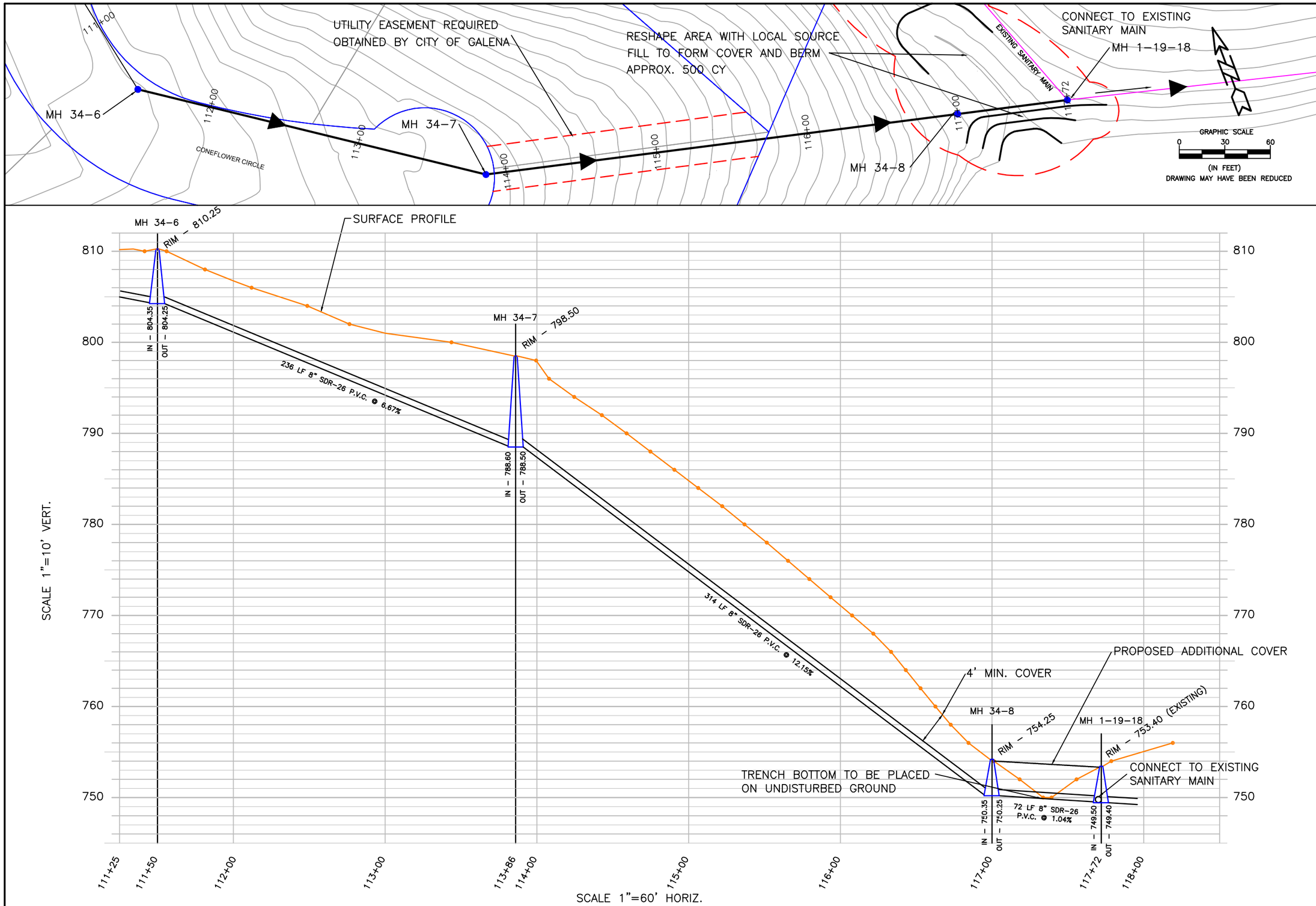

CITY OF GALENA
101 GREEN STREET
GALENA, IL 61036

DRAWN BY: MJO
CHECKED BY: TG, CAL
SCALE: 1"=60'

PLAN & PROFILE

SANITARY SEWER DIVERSION
U.S. 20 & CHETLAIN LANE
GALENA, IL

FILE NO.
SSD2017

SHEET
7 OF 10

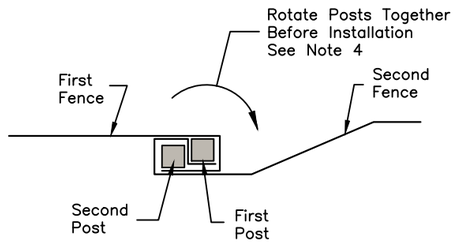

SPLICE DETAIL – PLAN VIEW

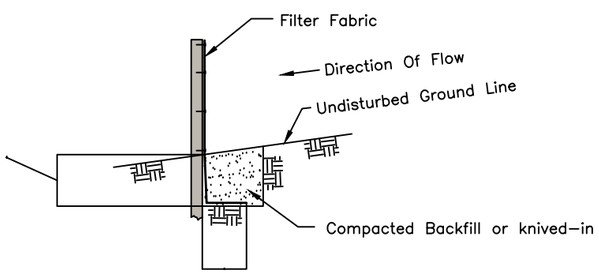

FABRIC ANCHOR SECTION

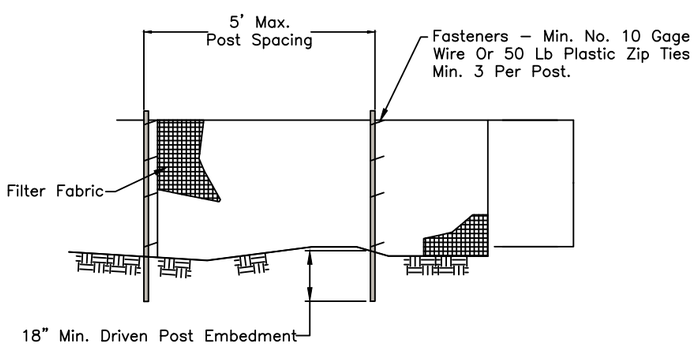

ELEVATION

NOTES:
1. Temporary silt fence shall be installed prior to any grading work in the area to be protected. Fence shall be maintained throughout the construction period and removed in conjunction with the final grading and site stabilization.

2. Filter fabric shall meet the requirements of material specification 592 Geotextile Table 1 or 2, Class I with equivalent opening size of at least 30 for nonwoven and 50 for woven.

3. Fence posts shall be either wood post with a minimum cross–sectional area of 1.5" X 1.5" or a standard steel post.

4. When splices are necessary make splice at post according to splice detail. Place the end post of the second fence inside the end post of the first fence. Rotate both posts together at least 180 degrees to create a tight seal with the fabric material. Cut the fabric near the bottom of the posts to accommodate the 6 inch flap. Then drive both posts and bury the flap. Compact backfill well.

TEMPORARY EROSION CONTROL

NOT TO SCALE

NOTES:
1. Backfill with Type "C" material (from excavation)

2. Class "I" bedding per ASTM D–2321, see detail.

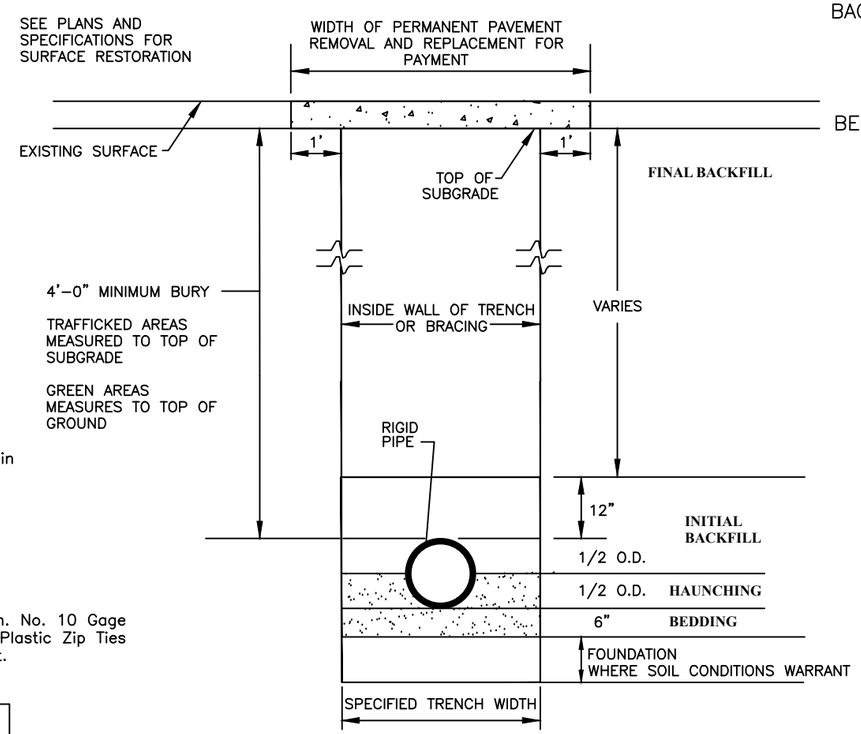

TYPICAL TRENCH DETAILS

NOT TO SCALE

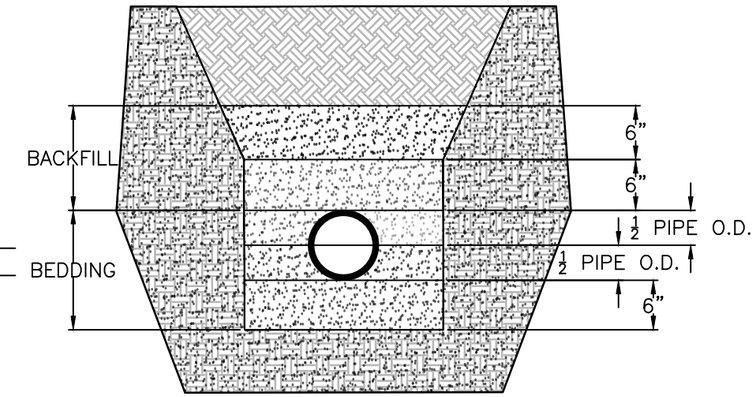

NOTES:

1. 12" Class I or Class II backfill material.
2. Min. 6" plus pipe diameter class I bedding material.
3. Lifts compacted as shown.

ASTM D–2321

Class I Material: Graded or crushed stone $\frac{1}{4}$" – 1 $\frac{1}{2}$" diameter.

Class II Material: Course sands & gravel to 1 $\frac{1}{2}$" – small % of granular / non–cohesive material – compact to 85% (min.) proctor.

CLASS "I" BEDDING DETAIL

NOT TO SCALE

EXCAVATION SAFETY:

1. Excavations shall be properly benched, or utilize a trench box for protection of the workers.
2. Excavations shall be properly marked or fenced to protect the public.
3. Stairs, ramps or ladders shall be provided, no more than 25' laterall travel is allowed.
4. BENCHING:
   TYPE A SOIL (UNDISTURBED): BENCH AT $\frac{3}{4}$ TO 1;
   TYPE B SOIL (DRY, COHESIONLESS): BENCH AT 1 TO 1;
   TYPE C SOIL (WET, COHESIONLESS): BENCH AT 1–1/2 TO 1.

CITY OF GALENA
101 GREEN STREET
GALENA, IL 61036

DRAWN BY: MJO
CHECKED BY: TG, CAL
SCALE: N/A

SPECIFICATIONS

SANITARY SEWER DIVERSION
U.S. 20 & CHETLAIN LANE
GALENA, IL

FILE NO.
SSD2017

SHEET
8 OF 10

WHEN PROPOSED SEWER (OR WATER) IS LOCATED 10 FEET OR MORE FROM EXISTING WATER (OR SEWER), NO SPECIAL CONSTRUCTION REQUIRED. SEE ARTICLE 41–2.01A (1)

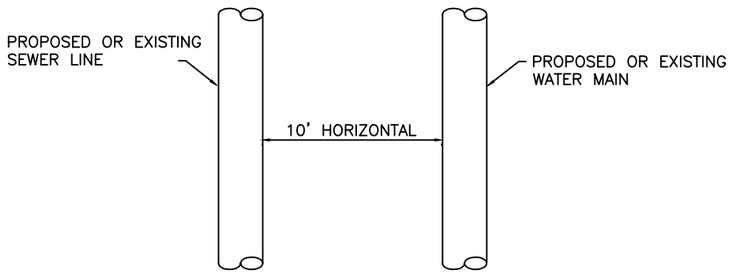

HORIZONTAL SEPARATION

NOT TO SCALE

WHEN PROPOSED SEWER (OR WATER) IS LOCATED LESS THAN 10 FEET FROM EXISTING WATER (OR SEWER), DETAILS BELOW SHALL APPLY. SEE ARTICLE 41–2.01B (2)

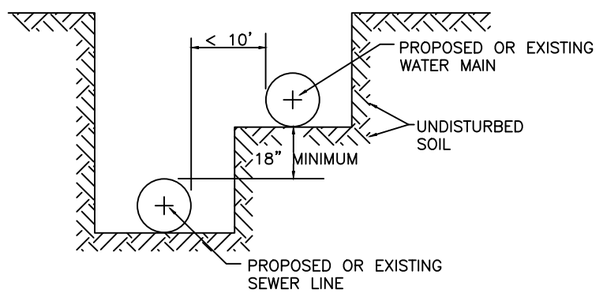

HORIZONTAL SEPARATION < 10'

NOT TO SCALE

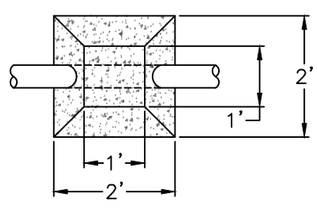

GUIDELINES

1. POURED CONCRETE ANCHORAGE BLOCKS. REQUIRED ON ALL SLOPES IN EXCESS OF 20% (1:5) INSTALLED AT EACH PIPE JOINT OR AT 20' MAX.

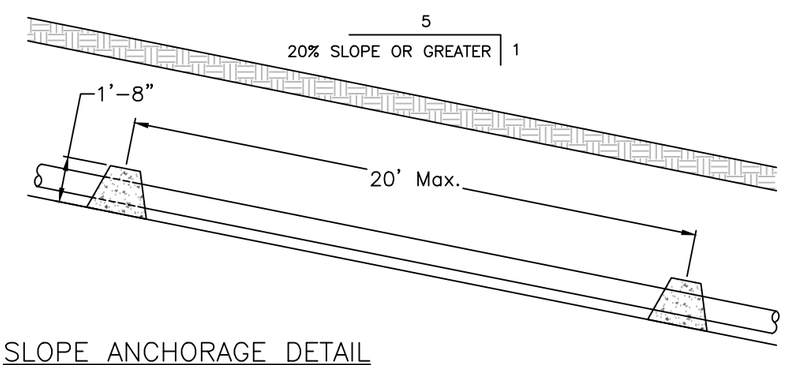

SLOPE ANCHORAGE DETAIL

NOT TO SCALE

PROPOSED SEWER LINE WITH 18" MINIMUM VERTICAL SEPARATION ABOVE EXISTING WATER MAIN

NOTE: COMPACTION REQUIREMENTS REFER TO ARTICLE 20–4

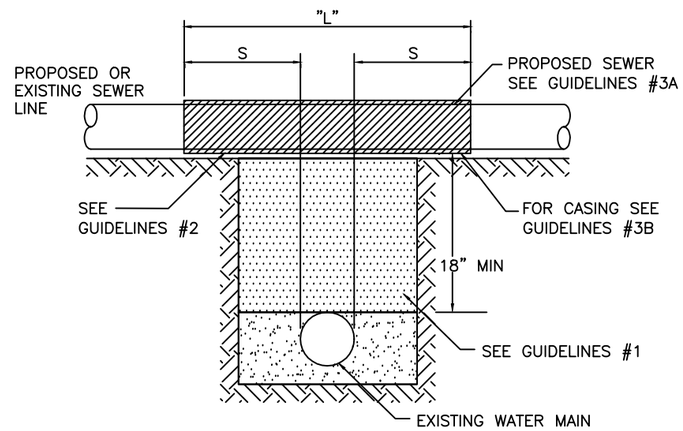

NOTE: "S" THE LENGTH NECESSARY TO PROVIDE 10 FEET OF SEPARATION AS MEASURED PERPENDICULAR TO THE EXISTING WATER MAIN

GUIDELINES

1. IF SELECT GRANULAR BACKFILL EXISTS: REMOVE WITHIN WIDTH OF PROPOSED SEWER TRENCH AND REPLACE WITH SELECT EXCAVATED MATERIAL (CLASS IV) AND COMPACT
2. OMIT SELECT GRANULAR EMBEDMENT AND GRANULAR BACKFILL TO ONE (1) FOOT OVER TOP OF SEWER AND USE SELECT EXCAVATED MATERIAL (CLASS IV) AND COMPACT THE LENGTH OF "L" FEET.
3. A) CONSTRUCT "L" FEET OF PROPOSED SEWER OF WATER MAIN MATERIAL AND PRESSURE TEST, OR;

   B) USE "L" FEET OF WATER MAIN MATERIAL FOR CASING OF PROPOSED SEWER AND SEAL ENDS OF CASING.

VERTICAL SEPARATION (ABOVE WATER MAIN)

NOT TO SCALE

PROPOSED SEWER LINE BELOW EXISTING WATER MAIN WITH 18" MINIMUM VERTICAL SEPARATION.

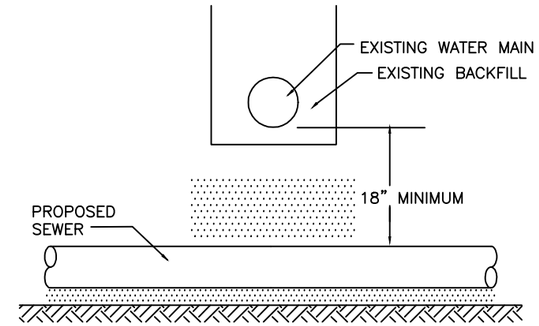

GUIDELINES

1. PROVIDE ADEQUATE SUPPORT FOR EXISTING WATER MAIN TO PREVENT DAMAGE DUE TO SETTLEMENT OF SEWER TRENCH.

VERTICAL SEPARATION (BELOW WATER MAIN)

NOT TO SCALE

PROPOSED SEWER LINE BELOW EXISTING WATER MAIN WITH LESS THAN 18" MINIMUM VERTICAL SEPARATION.

NOTE: COMPACTION REQUIREMENTS REFER TO ARTICLE 20–4

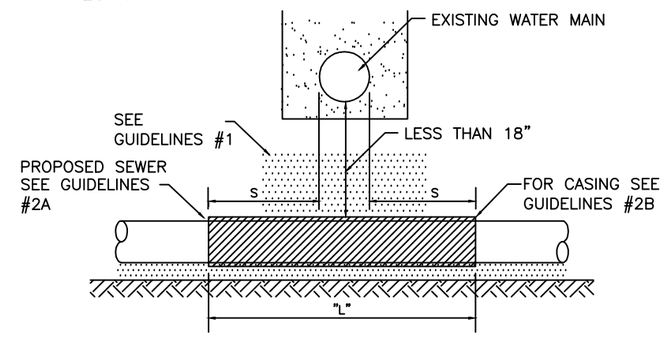

GUIDELINES

1. OMIT SELECT GRANULAR EMBEDMENT AND GRANULAR BACKFILL TO ONE (1) FOOT OVER TOP OF SEWER AND USE SELECT EXCAVATED MATERIAL (CLASS IV) AND COMPACT FOR "S" FEET ON EACH SIDE OF WATER MAIN.
2. A) CONSTRUCT "L" FEET OF PROPOSED SEWER OF WATER MAIN MATERIAL AND PRESSURE TEST, OR;

   B) USE "L" FEET OF WATER MAIN MATERIAL FOR CASING OF PROPOSED SEWER AND SEAL ENDS OF CASING.
3. PROVIDE ADEQUATE SUPPORT FOR EXISTING WATER MAIN TO PREVENT DAMAGE DUE TO SETTLEMENT OF SEWER TRENCH.

VERTICAL SEPARATION < 18"

NOT TO SCALE

CITY OF GALENA
101 GREEN STREET
GALENA, IL 61036

DRAWN BY: MJO
CHECKED BY: TG, CAL
SCALE: N/A

DETAILS

SANITARY SEWER DIVERSION
U.S. 20 & CHETLAIN LANE
GALENA, IL

FILE NO.
SSD2017

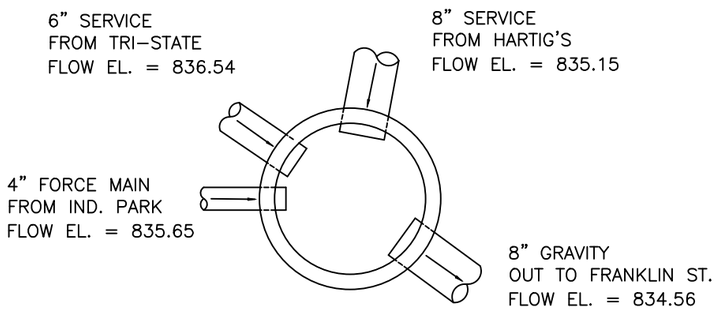

EXISTING CONFIGURATION – MH 34

NOT TO SCALE

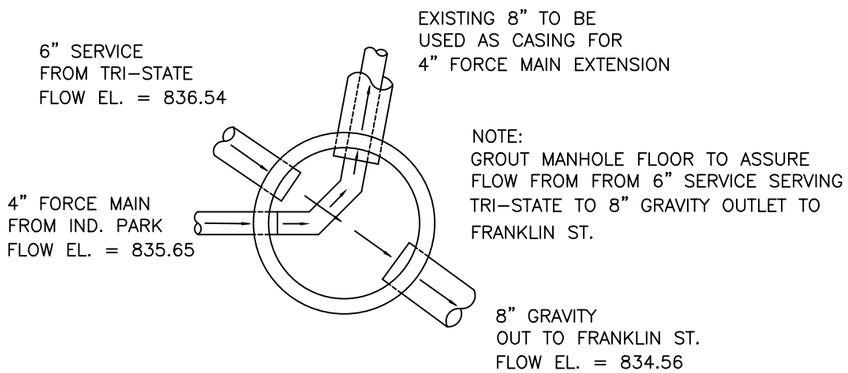

FINAL CONFIGURATION – MH 34

NOT TO SCALE

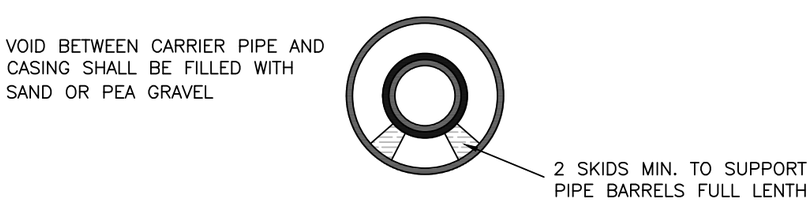

CASING DETAIL

NOT TO SCALE

NOTES:

1. REMOVE EXISTING MANHOLE.
2. TEMPORARILY DIVERT HARTIG'S SERVICE TO NEWLY INSTALLED SANITARY SEWER.
3. PUSH FORCE MAIN EXTENSION THROUGH EXISTING 8" PIPE.
4. INSTALL NEW MANHOLE AT GRADE.
5. CONNECT HARTIG'S SERVICE.
6. CONNECT FORCE MAIN AT MH-34.

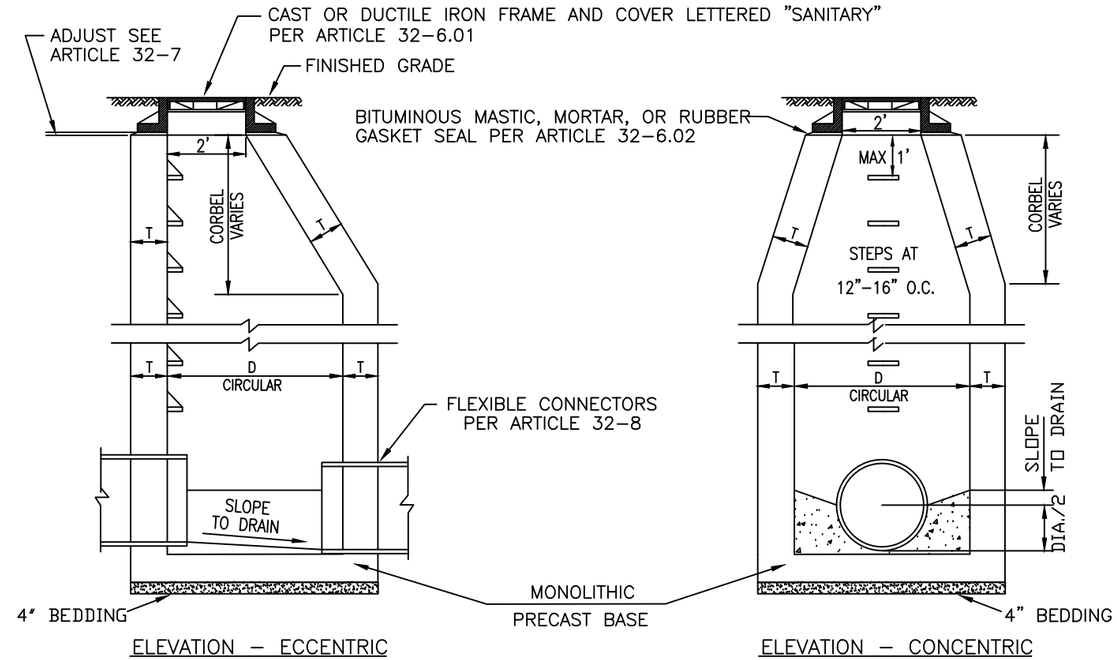

ELEVATION – ECCENTRIC

ELEVATION – CONCENTRIC

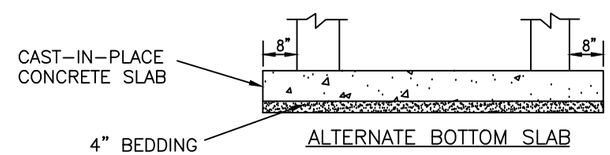

ALTERNATE BOTTOM SLAB

ALT. MATERIALS FOR WALLS	D	T (MIN.)
CONCRETE MASONRY UNITS	4 FEET 5 FEET 6 FEET	5 IN 5 IN 5 IN
BRICK MASONRY	4 FEET 5 FEET 6 FEET	8 IN 8 IN 8 IN
PRECAST REIN. CONCRETE SECT.	4 FEET 5 FEET 6 FEET	4 IN 5 IN 6 IN
CAST-IN-PLACE CONCRETE.	4 FEET 5 FEET 6 FEET	6 IN 6 IN 6 IN

NOTE: SANITARY MANHOLES SUBJECT TO SATURATED SOIL CONDITIONS OR SURFACE SUBMERGENCE SHALL BE EQUIPPED WITH CHIMNEY SEALS AND WATER TIGHT MANHOLE COVERS

NOTE: MANHOLE STEPS WHEN REQUIRED, SHALL BE FURNISHED AND INSTALLED AS SHOWN ON THE PLANS IN ACCORDANCE WITH ARTICLE 32-5

REFERENCE SECTION 32 FOR SANITARY SEWER MANHOLE SPECIFICATIONS

TYPE "A" MANHOLE

NOT TO SCALE

CITY OF GALENA
101 GREEN STREET
GALENA, IL 61036

DRAWN BY: MJO
CHECKED BY: TG, CAL
SCALE: N/A

DETAILS

SANITARY SEWER DIVERSION
U.S. 20 & CHETLAIN LANE
GALENA, IL

FILE NO.
SSD2017

SHEET
10 OF 10