CITY OF GALENA
EAST SIDE UTILITY SYSTEM IMPROVEMENTS

PROFESSIONAL SEALS

GEOFFRY T. BLANDIN
62-057265
LICENSED
PROFESSIONAL
ENGINEER
EXP.
11/2021
ILLINOIS

I HEREBY CERTIFY THAT THIS ENGINEERING DOCUMENT WAS PREPARED BY ME OR UNDER MY DIRECT PERSONAL SUPERVISION AND THAT I AM A DULY LICENSED PROFESSIONAL ENGINEER UNDER THE LAWS OF THE STATE OF ILLINOIS

FOR IIW, P.C.
PROFESSIONAL DESIGN FIRM LICENSE #184-000951

GEOFFRY T. BLANDIN — DATE 12/16/19

62-057265 — RENEWAL DATE 11/30/2021

REG. #

PAGES OR SHEETS COVERED BY THIS CERTIFICATION:
ALL SHEETS IN SHEET LIST TABLE

CONTACT

ANDY LEWIS
CITY ENGINEER
101 GREEN STREET
GALENA, IL 61036
V. (815)777-1050
E. alewis@cityofgalena.org

PROJECT LOCATION

NORTH

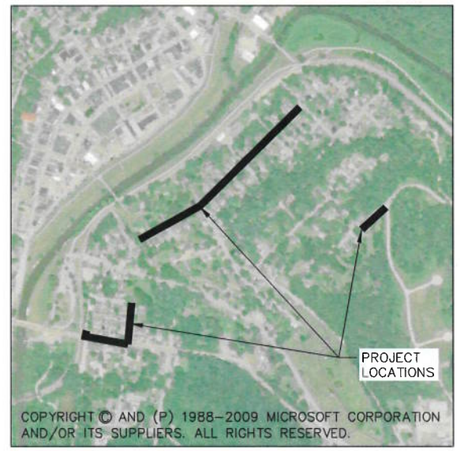

PROJECT INFORMATION

UTILITY NOTE:

THE LOCATIONS OF THE EXISTING UTILITIES SHOWN ARE APPROXIMATE ONLY. THE UTILITIES PRESENT MAY NOT EXIST AS SHOWN. ADDITIONAL FACILITIES OTHER THAN THOSE SHOWN MAY BE PRESENT. IT SHALL BE THE RESPONSIBILITY OF ANYONE USING THIS DOCUMENT TO ASCERTAIN THE EXACT LOCATION, SIZE, TYPE, MATERIAL, AND ELEVATION OF ALL UTILITIES THAT MAY BE PRESENT.

CALL BEFORE YOU DIG
JULIE
ILLINOIS ONE-CALL SYSTEM
(800)892-0123

UTILITY PROVIDERS:

WATER & SEWER:	CITY OF GALENA 1-815-777-1050
GAS:	NICOR GAS JEREMY THOMAS 815-216-1309
ELECTRICAL POWER:	JO CARROLL ENERGY, INC. 1-800-858-5522 VANNGUARD UTIL. PARTNERS 1-608-223-2014
TELEPHONE:	ATT DISTRIBUTION HECTOR GARCIA 847-888-6799
CABLE TELEVISION:	MEDIACOM 1-855-633-4226
ILLINOIS ONE-CALL	JULIE 1-800-892-0123

SHEET LIST TABLE

SHEET NUMBER	SHEET TITLE
G0.01	COVER SHEET
G0.02	CIVIL ABBREVIATIONS
G0.03	TRAFFIC CONTROL
G0.04	TRAFFIC CONTROL
G0.05	TRAFFIC CONTROL
G0.06	TRAFFIC CONTROL
G0.07	TRAFFIC CONTROL
C1.01	EXISTING CONDITIONS
C1.02	EXISTING CONDITIONS
C1.03	EXISTING CONDITIONS
C1.04	EXISTING CONDITIONS
C2.01	EROSION CONTROL NOTES
C2.02	EROSION CONTROL DETAILS
C2.10	EROSION CONTROL PLAN
C2.11	EROSION CONTROL PLAN
C2.12	EROSION CONTROL PLAN
C2.13	EROSION CONTROL PLAN
C5.01	WATER DETAILS
C5.02	WATER DETAILS
C5.03	SANITARY DETAILS
C5.10	WATER MAIN & SANITARY SEWER
C5.11	WATER MAIN & SANITARY SEWER
C5.12	WATER MAIN & SANITARY SEWER
C5.13	WATER MAIN & SANITARY SEWER
C5.14	WATER MAIN & SANITARY SEWER
C5.15	WATER MAIN & SANITARY SEWER
C5.16	WATER MAIN & SANITARY SEWER
C6.01	PAVING DETAILS
C6.10	PAVING PLANS
C6.11	PAVING PLANS
C6.12	PAVING PLANS

IIW, P.C.
iiw
ARCHITECTURE
CIVIL ENGINEERING
CONSTRUCTION SERVICES
ENVIRONMENTAL ENGINEERING
LAND SURVEYING
MUNICIPAL ENGINEERING
STRUCTURAL ENGINEERING
TRANSPORTATION ENGINEERING
INTEGRITY.EXPERTISE.SOLUTIONS
www.iiwcngr.com • 800.556.4491

© COPYRIGHT 2019
ALL RIGHTS RESERVED.
THESE DOCUMENTS HAVE BEEN PREPARED SPECIFICALLY FOR THIS PROJECT ONLY. NO PART OF THIS DOCUMENT MAY BE REPRODUCED OR DISTRIBUTED IN ANY FORM WITHOUT THE PERMISSION OF IIW, P.C. ALL INFORMATION IN THIS DOCUMENT IS CONSIDERED PROPERTY OF IIW, P.C.

Project Description
COVER SHEET
CITY OF GALENA
EAST SIDE UTILITY
SYSTEM IMPROVEMENTS

P:\17\054\DRAWINGS\CIVIL\17054_ZZ_00_G.DWG 12/13/2019 3:02 PM LYNN NEAL

Drawing Issue Information
Project Mgr: GTB
Drawn By: MPA
Issued For Bidding: 12-16-19 Issued For Construction:

Rev	Description	Date	By

Sheet No:
G0.01
Project No: 17054

ABBREVIATIONS

Δ	CENTRAL ANGLE
A/C	AIR CONDITIONING(ER)
AC	ACRES
A.F.F.	ABOVE FINISHED FLOOR
AGG	AGGREGATE
AOH	ARROW ON HYDRANT
ARCH	ARCHITECTURAL
ASPH	ASPHALT
AVG	AVERAGE
B-B	B/C – B/C
B/C, BOC	BACK OF CURB
B/DITCH	BOTTOM OF DITCH
BFP	BACKFLOW PREVENTOR
B/L	BASE LINE
B/S	BOTTOM OF SLOPE
BLDG	BUILDING
B.M.	BENCH MARK
BOP	BEGINNING OF PROJECT
BOT	BOTTOM
BSMT	BASEMENT
BV	BUTTERFLY VALVE
C&G	CURB AND GUTTER
CATV	CABLE TELEVISION
CB	CATCH BASIN
C-C	CENTER TO CENTER
CF	CUBIC FEET
CH	CHORD
CH BRG	CHORD BEARING
CIP	CAST IRON PIPE
C-I-P	CAST-IN-PLACE
CISP	CAST IRON SOIL PIPE
CJ	CONTROL JOINT
℄ OR CL	CENTERLINE
CLR	CLEAR
CMP	CORRUGATED METAL PIPE
CMU	CONCRETE MASONRY UNIT
CO	CLEAN OUT
COL	COLUMN
COMP	COMPACTED
CONC	CONCRETE
CONN	CONNECTION
CONST	CONSTRUCTION
CONT	CONTINUOUS
COR	CORNER
CP	CONTROL POINT
CPE	CORRUGATED POLYETHYLENE PIPE
CRST	CRUSHED STONE
CSP	CORRUGATED STEEL PIPE
CTRD	CENTERED
CTR	CENTER
CULT	CULTIVATED
CV	CHECK VALVE
CY	CUBIC YARD
D	DEGREE OF CURVE
DIA (ø)	DIAMETER
DIP	DUCTILE IRON PIPE
DN	DOWN
DRWY	DRIVEWAY
DS	DOWNSPOUT
DWG(S)	DRAWING(S)
DWL(S)	DOWEL(S)
E	EAST
E'LY	EASTERLY
EA	EACH
EJ	EXPANSION JOINT
EL	ELEVATION
ELEC	ELECTRICAL
ELEV	ELEVATOR
EMBED	EMBEDMENT
ENGR	ENGINEER
ENTR	ENTRANCE
EOP	END OF PROJECT
EOR	END OF RADIUS
E/P	EDGE OF PAVEMENT
EQ	EQUAL
E/S	EDGE OF SHOULDER
ESMT	EASEMENT
EST	ESTIMATE
EX	EXISTING
EXC	EXCAVATE/EXCAVATION
EXP	EXPANSION
EXT	EXTERIOR
EXTD	EXTEND
EW	EACH WAY
FD	FLOOR DRAIN
FDN	FOUNDATION
F.E.	FIELD ENTRANCE
FES	FLARED END SECTION
F-F	FACE TO FACE
FFE	FINISH FLOOR ELEVATION
FG	FORM GRADE
FIN GR	FINISHED GRADE
FL	FLOWLINE
FLG	FLANGE
FLR	FLOOR
FM	FORCE MAIN
FND	FOUND
FT	FOOT/FEET
FTG	FOOTING
FUT	FUTURE
FV	FIELD VERIFY
G	GUTTER
GC	GENERAL CONTRACTOR
GALV	GALVANIZED
GND	GROUND
GRAN	GRANULAR
GRD	GRADE
GV	GATE VALVE
HMA	HOT MIX ASPHALT
HORIZ	HORIZONTAL
HPT	HIGH POINT
HSD	HEADLIGHT STOPPING DISTANCE
HYD	HYDRANT
ID	INSIDE DIA/INSIDE DIM
IE	INVERT ELEVATION
IMP	IMPROVEMENTS
IN	INCHES
INV	INVERT
IP	IRON PIPE
JB	JUNCTION BOX
JT	JOINT/JOINT LENGTH
K	RATE OF VERT CURVATURE
L	LENGTH OF CURVE
LAT	LATERAL
LF	LINEAL FOOT
LONG	LONGITUDINAL
LP	LIGHT POLE
LPT	LOW POINT
LT	LEFT
MAX	MAXIMUM
ME	MATCH EXISTING
MH	MANHOLE
MIN	MINIMUM
MISC	MISCELLANEOUS
MON	MONUMENT
MP	MILE POST
N	NORTH
N/A	NOT APPLICABLE
NE'LY	NORTHEASTERLY
N'LY	NORTHERLY
NO/#	NUMBER
NIC	NOT IN CONTRACT
NTS	NOT TO SCALE
NW'LY	NORTHWESTERLY
OC	ON CENTER
OD	OUTSIDE DIAMETER
PC	POINT OF CURVE
PERF	PERFORATED
PI	POINT OF INTERSECTION
P/L	PROPERTY LINE
PM	PRINCIPAL MERIDIAN
POB	POINT OF BEGINNING
POC	POINT OF CURVE
POT	POINT OF TANGENT
PRC	POINT OF REVERSE CURVE
PRELIM	PRELIMINARY
PROP	PROPOSED
PRV	PRESSURE REDUCING VALVE
PT	POINT OF TANGENCY
PVC	POLYVINYL CHLORIDE
PVMT	PAVEMENT
QTY	QUANTITY
R	RADIUS
R&R	REMOVE & REPLACE
R&S	REMOVE & SALVAGE
RCB	REINFORCED CONCRETE BOX
RCAP	REINFORCED CONCRETE ARCH PIPE
RCP	REINFORCED CONCRETE PIPE
RD	ROAD
REBAR	REINFORCING BAR
REF	REFERENCE
REINF	REINFORCING/REINFORCED
REV	REVISION
RIM	RIM ELEVATION
ROW	RIGHT OF WAY
RP	RADIUS POINT
RS	RESILIENT SEAT
RT	RIGHT
S	SOUTH
S=	SUPERELEVATION
SAN	SANITARY
SANS	SANITARY SEWER
SB	SOIL BORING
SCH	SCHEDULE
SD	SUB DRAIN
SEC	SECTION
SE'LY	SOUTHEASTERLY
SF	SQUARE FOOT
S.F.D.	STEP FOOTING DOWN
SHT	SHEET
SIG.	SIGNAL
SIM.	SIMILAR
S'LY	SOUTHERLY
SOG	SLAB ON GRADE
SPEC	SPECIFICATION
SS	STAINLESS STEEL
SSD	STOPPING SIGHT DISTANCE
ST	STREET
STA	STATION
STD	STANDARD
STL	STEEL
STM	STORM
STMS	STORM SEWER
SW'LY	SOUTHWESTERLY
SY	SQUARE YARD
T	TANGENT LENGTH
T/B	TOP OF BANK
T/DITCH	TOP OF DITCH
T/C, TC	TOP OF CURB
T/GRAV	TOP OF GRAVEL
T/WALL	TOP OF WALL
T/P, TP	TOP OF PAVEMENT
T/S	TOP OF SLOPE
T/SUB	TOP OF SUBGRADE
T/W, TW	TOP OF WALK
T/WM	TOP OF WATER MAIN
T & B	TOP AND BOTTOM
T.O.B.	TOP OF BEAM
T.O.B.L.	TOP OF BRICK LEDGE
T.O.C.	TOP OF CONCRETE
T.O.E.F.	TOP OF EXISTING FOOTING
T.O.F.	TOP OF FOOTING
T.O.M.	TOP OF MASONRY
T.O.P.	TOP OF PIER
T.O.S.	TOP OF STEEL
TCE	TEMP CONSTRUCTION EASEMENT
TEL	TELEPHONE
TEMP	TEMPORARY
THK	THICK / THICKNESS
TWP	TOWNSHIP
TYP	TYPICAL
U	UTILITY
UAC	USE AS CONSTRUCTED
UE	UTILITY EASEMENT
UL	UNDERWRITERS LABORATORIES, INC.
ULFM	UNDERWRITERS LABORATORIES FACTORY MUTUAL
UNO	UNLESS NOTED OTHERWISE
VAR	VARIES
VC	VERTICAL CURVE
VCP	VITRIFIED CLAY PIPE
VER	VERIFY
VERT	VERTICAL
VOL	VOLUME
VPC	VERT POINT OF CURVE
VPI	VERT POINT OF INTERSECTION
VPT	VERT POINT OF TANGENCY
W	WEST
W/	WITH
W'LY	WESTERLY
WM	WATER MAIN
W/O	WITHOUT
W.P.	WORKING POINT
WD	WOOD
WSO	WATER SHUT OFF
WV	WATER VALVE
WWF	WELDED WIRE FABRIC
YD	YARD

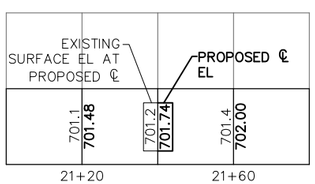

PROFILE LEGEND

LEGEND

EXISTING		PROPOSED
	PROPERTY LINE	
	EASEMENT	
	SECTION LINE	
	QUARTER SECTION LINE	
	QUARTER QUARTER SECTION LINE	
	CENTERLINE	
D	STORM SEWER	D
SD	SUB DRAIN	SD
S	SANITARY SEWER	S
FM	FORCE MAIN	FM
W	WATER LINE	W
G	GAS LINE	G
OHE	OVERHEAD ELECTRIC	OHE
E	UNDERGROUND ELECTRIC	E
OHT	OVERHEAD TELEPHONE	OHT
T	UNDERGROUND TELEPHONE	T
OHTV	OVERHEAD TELEVISION	OHTV
TV	UNDERGROUND TELEVISION	TV
FIB	FIBER OPTIC	FIB
X	WIRE FENCE	X
O	CHAINLINK FENCE	O
	WOOD FENCE	
000	CONTOUR LINE	000
	RAILROAD TRACKS	
	GUARD RAIL	
+ 0.00	SPOT ELEVATION	+ 0.00
	DIRECTION OF FLOW	
	TREE LINE	

EXISTING		PROPOSED
	CATCH BASIN	
	AREA INTAKE	
D	STORM MANHOLE	D
S	SANITARY MANHOLE	S
U	UTILITY MANHOLE	U
V	WATER VALVE MANHOLE	V
	FIRE HYDRANT	
SO	WATER SHUT OFF	SO
WV	WATER VALVE	WV
YH	YARD HYDRANT	YH
GV	GAS VALVE	GV
	SIGN	
	UTILITY POLE	
	UTILITY POLE WITH LIGHT	
	TRAFFIC SIGNAL POLE	
	GUY ANCHOR	
	LIGHT POLE	
	UTILITY PEDESTAL	
W	WELL	W
	MAILBOX	
	WATER LEVEL	
	BOLLARD	
	SOIL BORING	
PIV	POST INDICATOR VALVE	PIV
	DECIDUOUS TREE W/ TRUNK DIA.	
	CONIFEROUS TREE W/ TRUNK DIA.	
	SHRUB OR BUSH	

EROSION CONTROL LEGEND

TEMPORARY	
SF	PERIMETER CONTROL (STRAW WATTLES, FILTER SOCKS & SILT FENCE ARE GENERALLY INTERCHANGEABLE)
CW	CONCRETE WASHOUT
CE	CONSTRUCTION ENTRANCE
TM	MULCHING
TS	SEEDING
CB	COMPOST BLANKET
DC / RD	DITCH CHECK (ROCK DAM)
ST	SEDIMENT TRAP
IP	INLET PROTECTION
DC	DUST CONTROL

TEMPORARY	
	ROLLED EROSION CONTROL PRODUCT (RECP) PER PLAN
T	STREAM CROSSING
CRS	CONSTRUCTION ROAD STABILIZATION
TD	TEMPORARY DIVERSION
	LEVEL SPREADER

PERMANENT	
PS	SEEDING
S	SODDING
SFM	SEED, FERTILIZER & MULCH
OP	OUTLET PROTECTION
RS	REVETMENT SLOPE PROTECTION
	SOD DROP INLET PROTECTION
CD	CHECK DAM
SC	STONE CHECK
SB	SEDIMENT BASIN
	SURFACE ROUGHENING
	TURF REINFORCEMENT MAT (TRM)
SD	SLOPE DRAIN
PD	PERMANENT DIVERSION
	LEVEL SPREADER

PERMANENT	
V	VEGETATIVE STREAMBANK STABILIZATION
S	STRUCTURAL STREAMBANK STABILIZATION
RR	RIP RAP LINED CHANNEL
GL	GRASS LINED CHANNEL (_____) MATERIAL REQUIRED

SURVEY

■	FOUND REBAR
●	FOUND IRON PIPE
○	SET REBAR

IIW, P.C.
iiw
ARCHITECTURE
CIVIL ENGINEERING
CONSTRUCTION SERVICES
ENVIRONMENTAL ENGINEERING
LAND SURVEYING
MUNICIPAL ENGINEERING
STRUCTURAL ENGINEERING
TRANSPORTATION ENGINEERING
INTEGRITY.EXPERTISE.SOLUTIONS

© COPYRIGHT 2019
ALL RIGHTS RESERVED.
THESE DOCUMENTS HAVE BEEN PREPARED SPECIFICALLY FOR THIS PROJECT ONLY. NO PART OF THIS DOCUMENT MAY BE REPRODUCED OR DISTRIBUTED IN ANY FORM WITHOUT THE PERMISSION OF IIW, P.C. ALL INFORMATION IN THIS DOCUMENT IS CONSIDERED PROPERTY OF IIW, P.C.

Project Description

CIVIL ABBREVIATIONS AND LEGEND
CITY OF GALENA
EAST SIDE UTILITY SYSTEM IMPROVEMENTS

P:\17\054\DRAWINGS\CIVIL\17054 ZZ 00 6.DWG 12/13/2019 3:39 PM LYNN NEAL

Drawing Issue Information
Project Mgr: GTB
Drawn By: MPA
Issued For Bidding: 12-16-19 Issued For Construction: .

Rev	Description	Date	By
.	.	.	.
.	.	.	.
.	.	.	.
.	.	.	.
.	.	.	.
.	.	.	.

Sheet No:
G0.02
Project No: 17054

TRAFFIC CONTROL GENERAL NOTES

WORK MAY NOT BEGIN WITHOUT APPROPRIATE TRAFFIC CONTROL IN PLACE.

CONTRACTOR SHALL NOTIFY ILLINOIS DOT REGION 2 ENGINEER, KEVIN MARCHEK, AT 815–284–2271 PRIOR TO PLACING ANY SIGNS ALONG DECATUR ST/HIGHWAY 20. CONTACT ANDY LEWIS AT 815–777–1050 PRIOR TO PLACING ANY SIGNS ON GALENA CITY STREETS.

THE BID ITEM "TRAFFIC CONTROL" SHALL INCLUDE THE COST FOR ALL TRAFFIC AND PEDESTRIAN PROTECTION CONTROL MEASURES REQUIRED OF THE CONTRACTOR. ALL TRAFFIC CONTROL DEVICES SHALL BE FURNISHED, ERECTED, MAINTAINED, AND REMOVED BY THE CONTRACTOR. THIS SHALL INCLUDE INSPECTION DURING WORKING HOURS, NIGHTTIME, AND WEEKENDS TO ENSURE THAT THE DEVICES ARE CORRECTLY POSITIONED AND IN WORKING ORDER.

CONTRACTOR IS RESPONSIBLE FOR PEDESTRIAN PROTECTION NOT SPECIFICALLY SHOWN ON THESE PLANS BUT DICTATED BY CONSTRUCTION OPERATION FOR THE WORK AREA. PEDESTRIAN PROTECTION SHALL CONSIST OF BARRICADES AND SIGNS AS NEEDED FOR THE GUIDANCE OF PEDESTRIANS. TYPICALLY, PEDESTRIAN SIGNING IS PLACED AT INTERSECTIONS SO PEDESTRIANS ARE NOT CONFRONTED WITH MID–BLOCK CROSSINGS. CONTRACTOR SHALL MAINTAIN PEDESTRIAN ACCESS TO HOMES THROUGHOUT THE PROJECT CORRIDOR. ACCESS PROVIDED SHALL INCLUDE A MINIMUM OF GRANULAR SURFACING TO TIE INTO EXISTING SIDEWALK NOT REMOVED AS PART OF CONSTRUCTION.

ALL TEMPORARY TRAFFIC CONTROL SIGNS AND DEVICES SHALL BE IN CONFORMANCE WITH THE MOST RECENT EDITION OF THE MUTCD. ALL SIGNS SHALL BE IN CONFORMANCE WITH THE STANDARD HIGHWAY SIGNS BOOK.

THE LOCATION FOR STORAGE OF EQUIPMENT BY THE CONTRACTOR DURING NON–WORKING HOURS SHALL BE IN SUCH A PLACE SO IT IS NOT SUBJECT TO BEING HIT BY ERRANT VEHICLES. EQUIPMENT SHALL NOT BE STORED WHERE IT BLOCKS THE VIEW OF TRAFFIC CONTROL DEVICES OR VISIBILITY AT INTERSECTIONS.

PROPOSED SIGN SPACING MAY BE MODIFIED BY THE CONTRACTOR TO MEET EXISTING FIELD CONDITIONS OR TO PREVENT OBSTRUCTION OF THE MOTORIST'S VIEW OF PERMANENT SIGNING. ALL ADJUSTMENTS ARE SUBJECT TO APPROVAL BY THE OWNER AND MUST BE DOCUMENTED IN THE TRAFFIC CONTROL DIARY.

PROPOSED CHANGES IN THE TRAFFIC CONTROL SHALL BE REVIEWED WITH THE OWNER'S REPRESENTATIVE AND APPROVAL OBTAINED BEFORE CHANGES ARE MADE OR TRAFFIC CONTROL IS INSTALLED.

THE BACKSIDE OF TYPE III BARRICADES SHALL BE FULLY REFLECTORIZED. STRIPES SHALL BE PROPERLY SLOPED DOWN TOWARD THE TRAFFIC SIDE. SIGNS MOUNTED ON TYPE III BARRICADES MAY NOT COVER THE BOTTOM TWO RAILS.

THE CONTRACTOR IS RESPONSIBLE FOR COVERING ANY PERMANENT SIGNS IN CONFLICT WITH TEMPORARY TRAFFIC CONTROL SIGNS.

OVERALL CONSTRUCTION A AREAS

PHASE 1A WORK ZONE

PHASE 2A WORK ZONE

PHASE 3A WORK ZONE

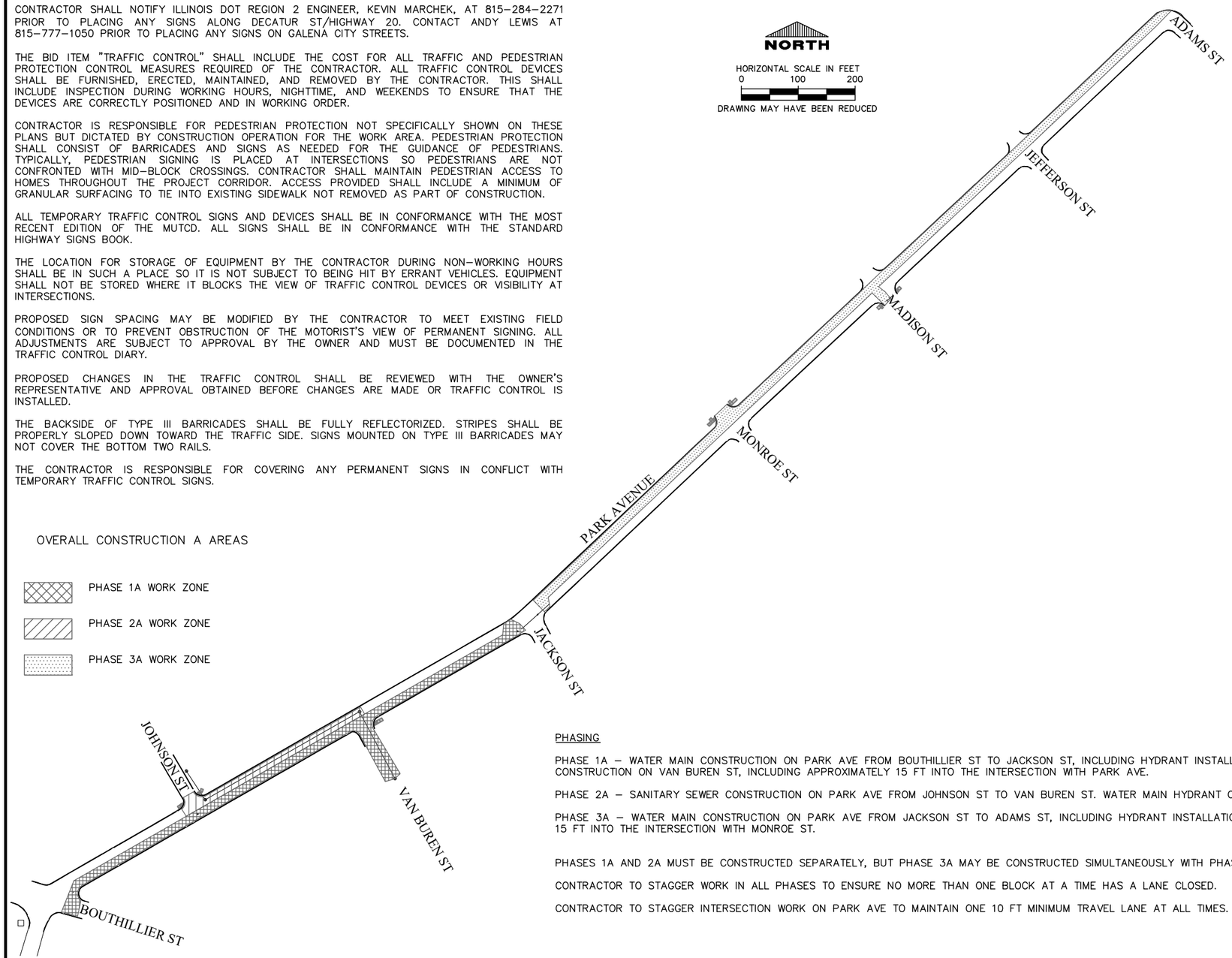

PHASING

PHASE 1A – WATER MAIN CONSTRUCTION ON PARK AVE FROM BOUTHILLIER ST TO JACKSON ST, INCLUDING HYDRANT INSTALLATION AT THE INTERSECTION OF PARK AVE AND JACKSON ST. SANITARY SEWER CONSTRUCTION ON VAN BUREN ST, INCLUDING APPROXIMATELY 15 FT INTO THE INTERSECTION WITH PARK AVE.

PHASE 2A – SANITARY SEWER CONSTRUCTION ON PARK AVE FROM JOHNSON ST TO VAN BUREN ST. WATER MAIN HYDRANT CONSTRUCTION AT THE INTERSECTION OF PARK AVE AND JOHNSON ST.

PHASE 3A – WATER MAIN CONSTRUCTION ON PARK AVE FROM JACKSON ST TO ADAMS ST, INCLUDING HYDRANT INSTALLATION AT THE INTERSECTION OF PARK AVE AND JACKSON ST AND APPROXIMATELY 15 FT INTO THE INTERSECTION WITH MONROE ST.

PHASES 1A AND 2A MUST BE CONSTRUCTED SEPARATELY, BUT PHASE 3A MAY BE CONSTRUCTED SIMULTANEOUSLY WITH PHASES 1A OR 2A.

CONTRACTOR TO STAGGER WORK IN ALL PHASES TO ENSURE NO MORE THAN ONE BLOCK AT A TIME HAS A LANE CLOSED.

CONTRACTOR TO STAGGER INTERSECTION WORK ON PARK AVE TO MAINTAIN ONE 10 FT MINIMUM TRAVEL LANE AT ALL TIMES.

TRAFFIC CONTROL NOTES

RESIDENT ACCESS DURING CONSTRUCTION SHALL BE PROVIDED TO THE GREATEST EXTENT PRACTICAL. THE CONTRACTOR SHALL NOTIFY THE OWNER 24 HOURS IN ADVANCE WHEN RESIDENT ACCESS WILL BE RESTRICTED.

DURING WORKING HOURS, CONTRACTOR TO FOLLOW IL HIGHWAY STANDARD 701501–06 FOR LANE CLOSURE.
ON–STREET PARKING SHALL BE RESTRICTED ON BOTH SIDES OF THE STREET IN THE WORK AREA, AND 200 FT APPROACHING THE WORK AREA IN BOTH DIRECTIONS. CONTRACTOR IS REQUIRED TO PROVIDE AND INSTALL TEMPORARY "NO PARKING" SIGNS. CONTRACTOR SHALL INFORM OWNER 24 HOURS IN ADVANCE OF INSTALLING NO PARKING SIGNS.

DURING NON–WORKING HOURS, CONTRACTOR TO FOLLOW MUTCD TA–11, LANE CLOSURE ON A TWO–LOANE ROAD WITH LOW TRAFFIC VOLUMES FOR LANE CLOSURE.
"FLAGGER AHEAD" SIGNS SHALL BE COVERED DURING NON–WORKING HOURS.
LENGTH OF LANE CLOSURE IS LIMITED TO 350 FT, INCLUDING TAPERS, DURING NON–WORKING HOURS.
FLASHING WARNING LIGHTS ARE REQUIRED ON BARRICADES DURING NON–WORKING HOURS

IIW, P.C.
iiw
ARCHITECTURE
CIVIL ENGINEERING
CONSTRUCTION SERVICES
ENVIRONMENTAL ENGINEERING
LAND SURVEYING
MUNICIPAL ENGINEERING
STRUCTURAL ENGINEERING
TRANSPORTATION ENGINEERING
INTEGRITY.EXPERTISE.SOLUTIONS

© COPYRIGHT 2019
ALL RIGHTS RESERVED.
THESE DOCUMENTS HAVE BEEN PREPARED SPECIFICALLY FOR THIS PROJECT ONLY. NO PART OF THIS DOCUMENT MAY BE REPRODUCED OR DISTRIBUTED IN ANY FORM WITHOUT THE PERMISSION OF IIW, P.C. ALL INFORMATION IN THIS DOCUMENT IS CONSIDERED PROPERTY OF IIW, P.C.

Project Description

TRAFFIC CONTROL
PHASES 1A-3A - PARK AVE
CITY OF GALENA
EAST SIDE UTILITY
SYSTEM IMPROVEMENTS

P:\17\054\DRAWINGS\CIVIL\17054_ZZ_00_G – TRAFFIC CONTROL.DWG 12/13/2019 3:39 PM \ NNN NEAL

Drawing Issue Information

Drawn By: MPA
Project Mgr: GTB
Issued For Bidding: 12-16-19 Issued For Construction: .

Rev	Description	Date	By
.	.	.	.
.	.	.	.
.	.	.	.
.	.	.	.
.	.	.	.
.	.	.	.

Sheet No:
G0.03
Project No: 17054

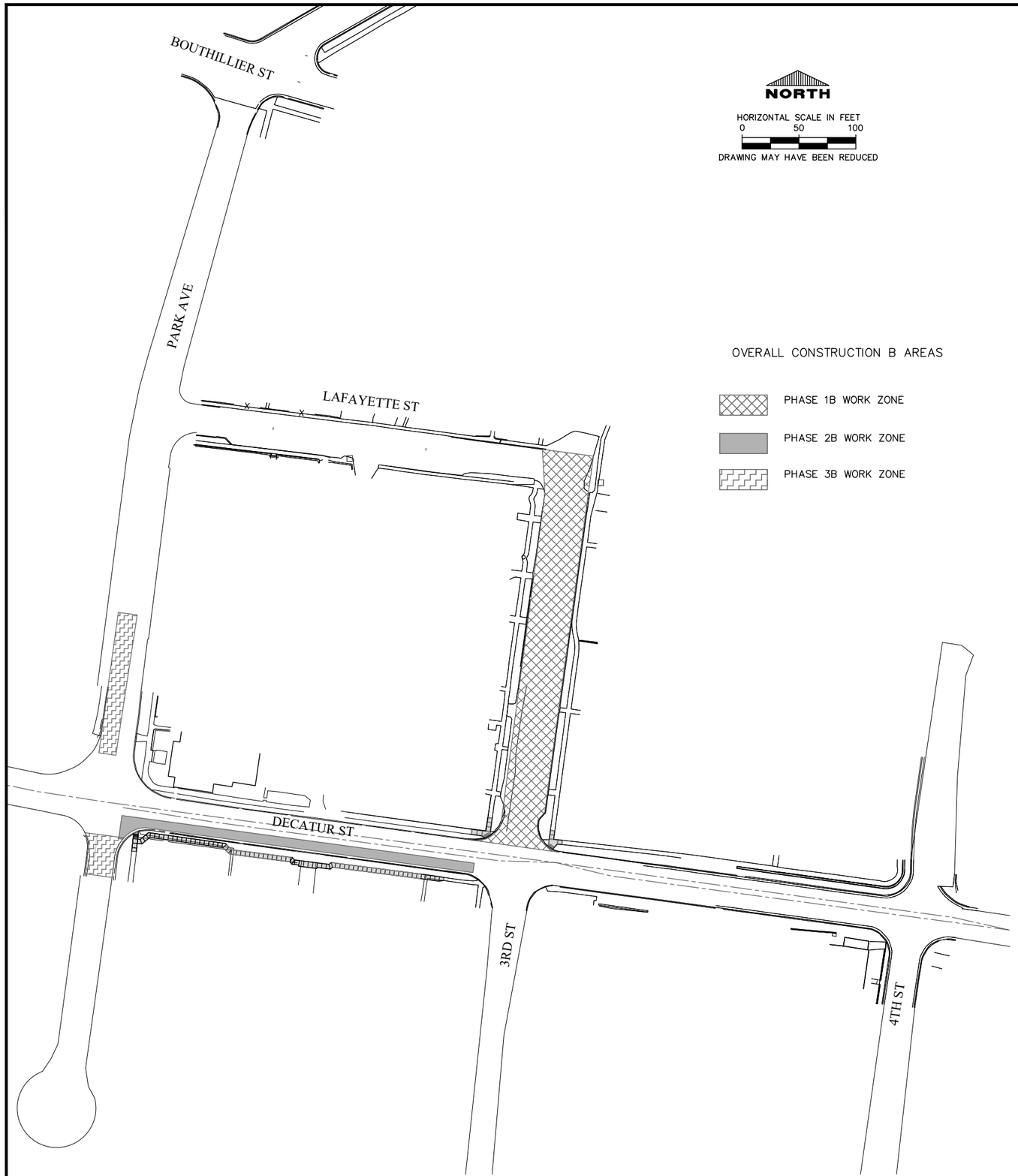

NORTH

HORIZONTAL SCALE IN FEET
0 50 100

DRAWING MAY HAVE BEEN REDUCED

OVERALL CONSTRUCTION B AREAS

PHASE 1B WORK ZONE

PHASE 2B WORK ZONE

PHASE 3B WORK ZONE

PHASING

PHASE 1B – WATER MAIN CONSTRUCTION ON 3RD ST, INCLUDING APPROXIMATELY TO DECATUR ST.

PHASE 2B – WATER MAIN CONSTRUCTION WITHIN DECATUR ST ROW, FROM THE INTERSECTION WITH PARK AVE TO THE WEST SIDE OF THE INTERSECTION WITH 3RD ST.

PHASE 3B – WATER MAIN CONSTRUCTION ON APPROXIMATELY 190 LINEAR FEET OF PARK AVE, INCLUDING JACK AND BORED HIGHWAY CROSSING.

PHASES 1B, 2B, & 3B MUST BE CONSTRUCTED SEPARATELY.

CONTRACTOR SHALL STAGGER WORK WITHIN DECATUR ST ROW TO MAINTAIN ONE 12 FT TRAVEL LANE AT ALL TIMES.

IIW, P.C.

iiw

ARCHITECTURE
CIVIL ENGINEERING
CONSTRUCTION SERVICES
ENVIRONMENTAL ENGINEERING
LAND SURVEYING
MUNICIPAL ENGINEERING
STRUCTURAL ENGINEERING
TRANSPORTATION ENGINEERING

INTEGRITY.EXPERTISE.SOLUTIONS

© COPYRIGHT 2019
ALL RIGHTS RESERVED.
THESE DOCUMENTS HAVE BEEN PREPARED SPECIFICALLY FOR THIS PROJECT ONLY. NO PART OF THIS DOCUMENT MAY BE REPRODUCED OR DISTRIBUTED IN ANY FORM WITHOUT THE PERMISSION OF IIW, P.C. ALL INFORMATION IN THIS DOCUMENT IS CONSIDERED PROPERTY OF IIW, P.C.

Project Description

TRAFFIC CONTROL
PHASES 1B - 3B
CITY OF GALENA
EAST SIDE UTILITY
SYSTEM IMPROVEMENTS

P:\17\054\DRAWINGS\CIVIL\17054_ZZ_00_G - TRAFFIC CONTROL.DWG 12/13/2019 3:39 PM LYNN NEAL

Drawing Issue Information

Project Mgr: GTB
Drawn By: MPA
Issued For Bidding: 12-16-19 Issued For Construction: .

Rev	Description	Date	By
.	.	.	.
.	.	.	.
.	.	.	.
.	.	.	.
.	.	.	.
.	.	.	.
.	.	.	.

Sheet No:

G0.04

Project No: 17054

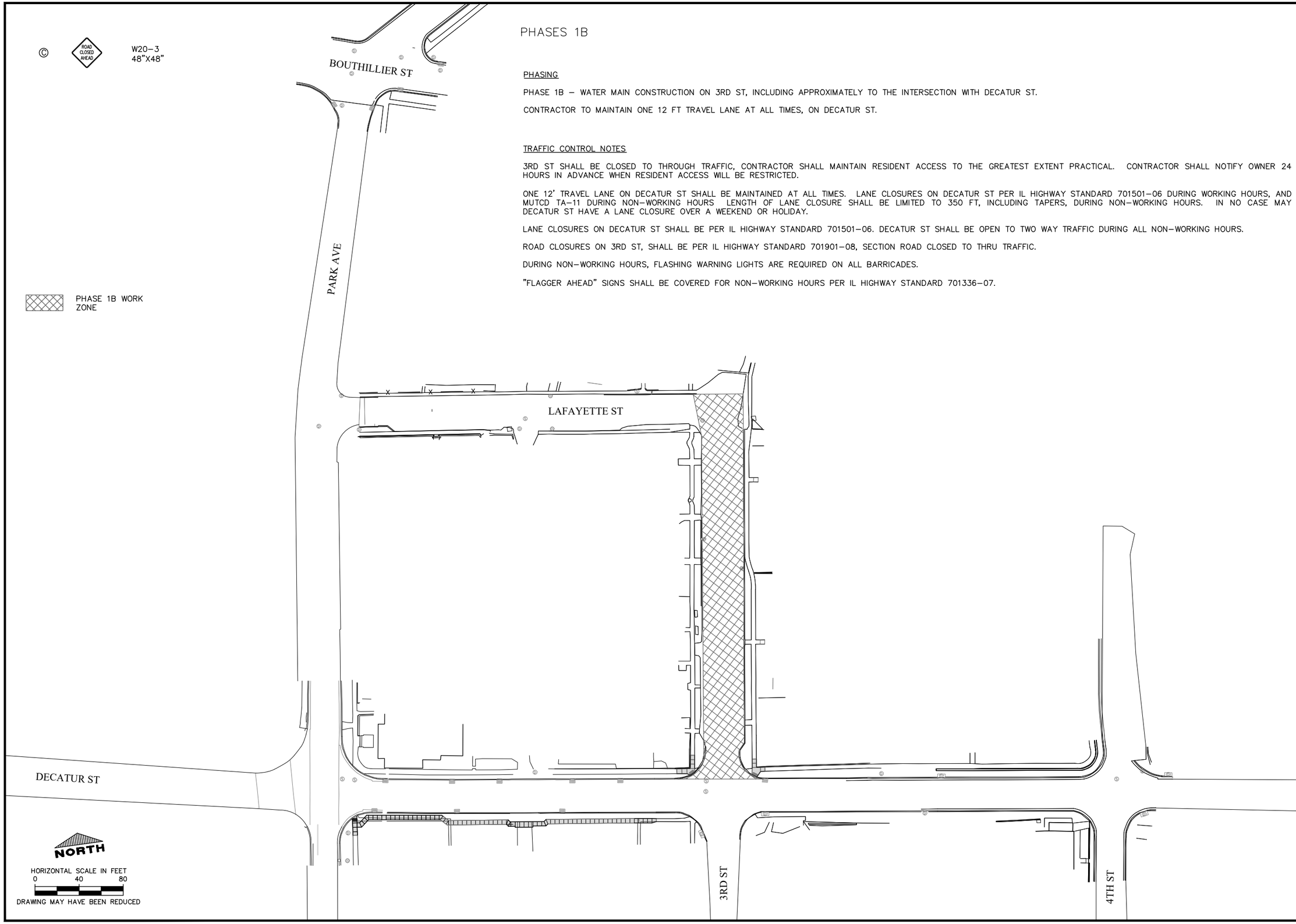

PHASES 1B

PHASING

PHASE 1B – WATER MAIN CONSTRUCTION ON 3RD ST, INCLUDING APPROXIMATELY TO THE INTERSECTION WITH DECATUR ST.

CONTRACTOR TO MAINTAIN ONE 12 FT TRAVEL LANE AT ALL TIMES, ON DECATUR ST.

TRAFFIC CONTROL NOTES

3RD ST SHALL BE CLOSED TO THROUGH TRAFFIC, CONTRACTOR SHALL MAINTAIN RESIDENT ACCESS TO THE GREATEST EXTENT PRACTICAL. CONTRACTOR SHALL NOTIFY OWNER 24 HOURS IN ADVANCE WHEN RESIDENT ACCESS WILL BE RESTRICTED.

ONE 12' TRAVEL LANE ON DECATUR ST SHALL BE MAINTAINED AT ALL TIMES. LANE CLOSURES ON DECATUR ST PER IL HIGHWAY STANDARD 701501–06 DURING WORKING HOURS, AND MUTCD TA–11 DURING NON–WORKING HOURS LENGTH OF LANE CLOSURE SHALL BE LIMITED TO 350 FT, INCLUDING TAPERS, DURING NON–WORKING HOURS. IN NO CASE MAY DECATUR ST HAVE A LANE CLOSURE OVER A WEEKEND OR HOLIDAY.

LANE CLOSURES ON DECATUR ST SHALL BE PER IL HIGHWAY STANDARD 701501–06. DECATUR ST SHALL BE OPEN TO TWO WAY TRAFFIC DURING ALL NON–WORKING HOURS.

ROAD CLOSURES ON 3RD ST, SHALL BE PER IL HIGHWAY STANDARD 701901–08, SECTION ROAD CLOSED TO THRU TRAFFIC.

DURING NON–WORKING HOURS, FLASHING WARNING LIGHTS ARE REQUIRED ON ALL BARRICADES.

"FLAGGER AHEAD" SIGNS SHALL BE COVERED FOR NON–WORKING HOURS PER IL HIGHWAY STANDARD 701336–07.

IIW, P.C.
iiw
ARCHITECTURE
CIVIL ENGINEERING
CONSTRUCTION SERVICES
ENVIRONMENTAL ENGINEERING
LAND SURVEYING
MUNICIPAL ENGINEERING
STRUCTURAL ENGINEERING
TRANSPORTATION ENGINEERING
INTEGRITY.EXPERTISE.SOLUTIONS

© COPYRIGHT 2019
ALL RIGHTS RESERVED.
THESE DOCUMENTS HAVE BEEN PREPARED SPECIFICALLY FOR THIS PROJECT ONLY. NO PART OF THIS DOCUMENT MAY BE REPRODUCED OR DISTRIBUTED IN ANY FORM WITHOUT THE PERMISSION OF IIW, P.C. ALL INFORMATION IN THIS DOCUMENT IS CONSIDERED PROPERTY OF IIW, P.C.

Project Description

TRAFFIC CONTROL
3RD ST
CITY OF GALENA
EAST SIDE UTILITY
SYSTEM IMPROVEMENTS

P:\17\054\DRAWINGS\CIVIL\17054_ZZ_00_G – TRAFFIC CONTROL.DWG 12/13/2019 3:39 PM \ NN NEAL

Drawing Issue Information

Drawn By: MPA
Project Mgr: GTB
Issued For Bidding: 12-16-19 Issued For Construction: .

Rev	Description	Date	By

Sheet No:

G0.05

Project No: 17054

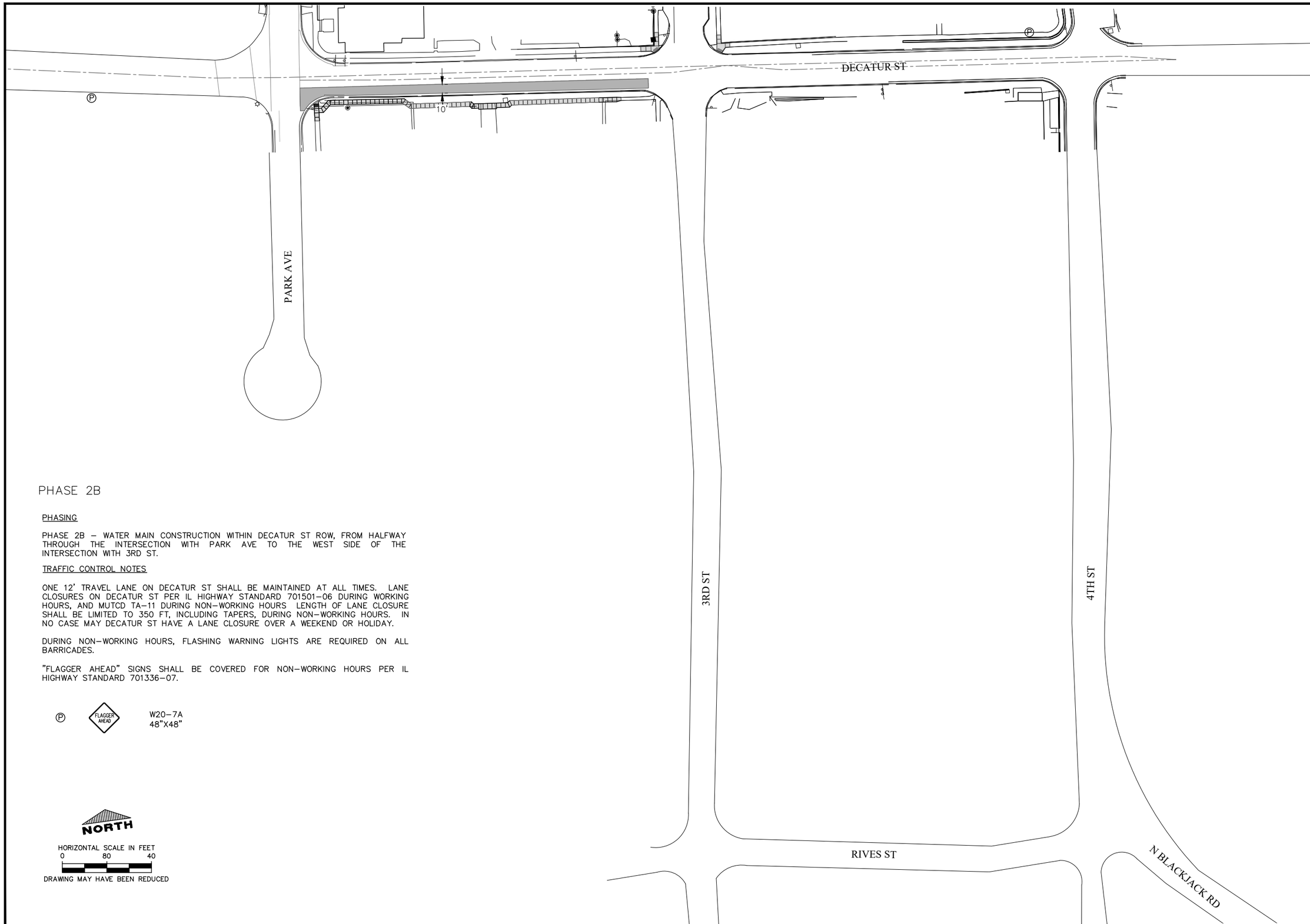

PHASE 2B

PHASING

PHASE 2B – WATER MAIN CONSTRUCTION WITHIN DECATUR ST ROW, FROM HALFWAY THROUGH THE INTERSECTION WITH PARK AVE TO THE WEST SIDE OF THE INTERSECTION WITH 3RD ST.

TRAFFIC CONTROL NOTES

ONE 12' TRAVEL LANE ON DECATUR ST SHALL BE MAINTAINED AT ALL TIMES. LANE CLOSURES ON DECATUR ST PER IL HIGHWAY STANDARD 701501–06 DURING WORKING HOURS, AND MUTCD TA–11 DURING NON–WORKING HOURS LENGTH OF LANE CLOSURE SHALL BE LIMITED TO 350 FT, INCLUDING TAPERS, DURING NON–WORKING HOURS. IN NO CASE MAY DECATUR ST HAVE A LANE CLOSURE OVER A WEEKEND OR HOLIDAY.

DURING NON–WORKING HOURS, FLASHING WARNING LIGHTS ARE REQUIRED ON ALL BARRICADES.

"FLAGGER AHEAD" SIGNS SHALL BE COVERED FOR NON–WORKING HOURS PER IL HIGHWAY STANDARD 701336–07.

Ⓟ FLAGGER AHEAD W20–7A 48"X48"

NORTH

HORIZONTAL SCALE IN FEET
0 80 40

DRAWING MAY HAVE BEEN REDUCED

IIW, P.C.

iiw

ARCHITECTURE
CIVIL ENGINEERING
CONSTRUCTION SERVICES
ENVIRONMENTAL ENGINEERING
LAND SURVEYING
MUNICIPAL ENGINEERING
STRUCTURAL ENGINEERING
TRANSPORTATION ENGINEERING

INTEGRITY.EXPERTISE.SOLUTIONS

© COPYRIGHT 2019
ALL RIGHTS RESERVED.
THESE DOCUMENTS HAVE BEEN PREPARED SPECIFICALLY FOR THIS PROJECT ONLY. NO PART OF THIS DOCUMENT MAY BE REPRODUCED OR DISTRIBUTED IN ANY FORM WITHOUT THE PERMISSION OF IIW, P.C. ALL INFORMATION IN THIS DOCUMENT IS CONSIDERED PROPERTY OF IIW, P.C.

Project Description

TRAFFIC CONTROL
DECATUR ST.
CITY OF GALENA
EAST SIDE UTILITY
SYSTEM IMPROVEMENTS

P:\17\054\DRAWINGS\CIVIL\17054_ZZ_00_G – TRAFFIC CONTROL.DWG 12/13/2019 3:40 PM LYNN NEAL

Drawing Issue Information

Drawn By: MPA
Project Mgr: GTB
Issued For Bidding: 12-16-19 Issued For Construction:

Rev	Description	Date	By

Sheet No:

G0.06

Project No: 17054

Ⓐ TYPE III BARRICADE

Ⓑ R11–4
60"X30"

Ⓒ R11–2
48"X30"

Ⓓ M4–10R
48"X18"

Ⓔ W20–3
48"X48"

Ⓕ W20–2A
48"X48"

Ⓖ D3–1
BLACK ON ORANGE

Ⓗ W20–7A
48"X48"

Ⓘ M4–8
30"X15"

Ⓙ M4–8a
24"X18"

Ⓚ M6–1L, 21"X15"
BLACK ON ORANGE

Ⓛ M6–1R, 21"X15"
BLACK ON ORANGE

Ⓜ M6–3, 21"X15"
BLACK ON ORANGE

Ⓝ PARK AVE DETOUR

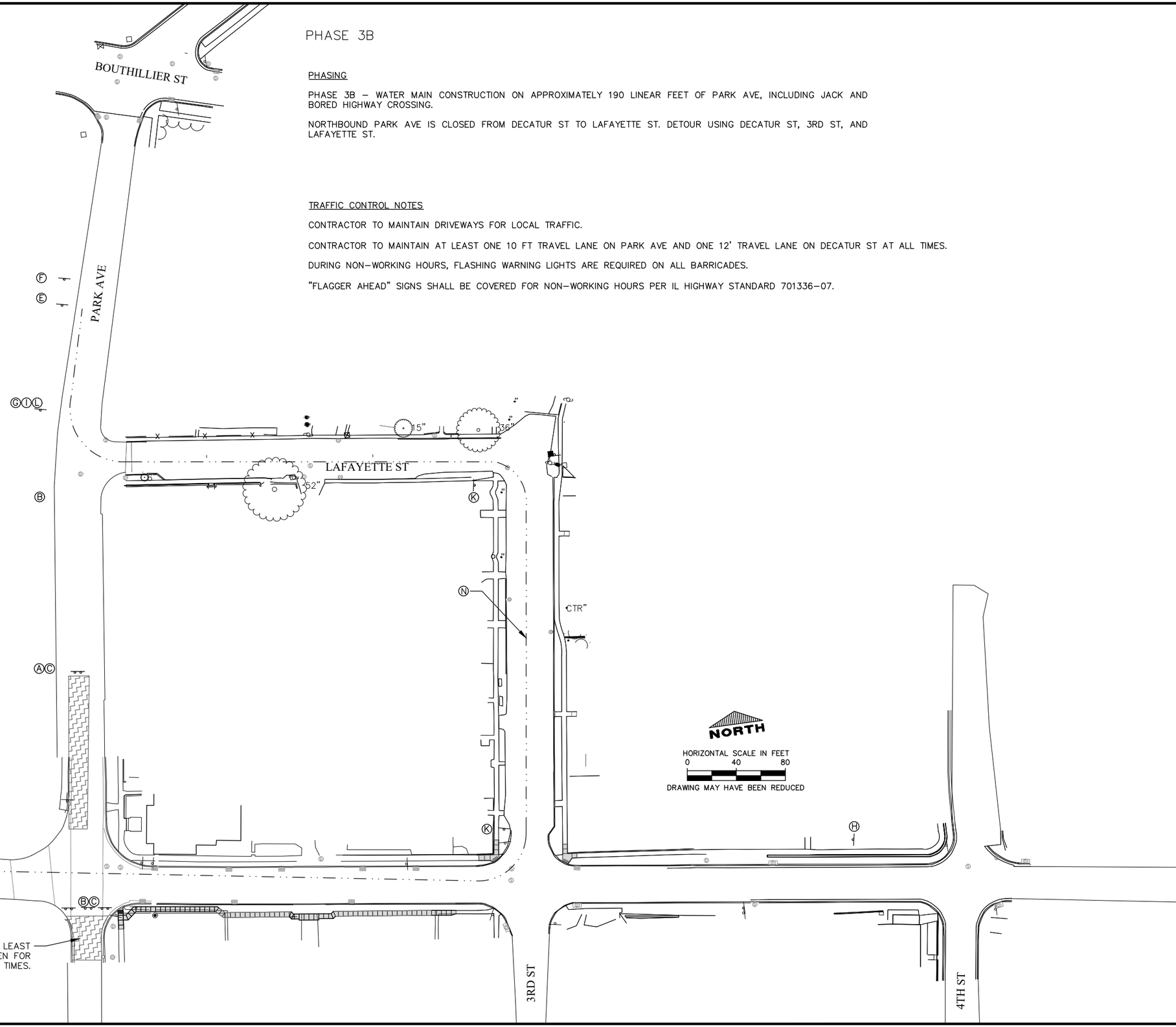

PHASE 3B

PHASING

PHASE 3B – WATER MAIN CONSTRUCTION ON APPROXIMATELY 190 LINEAR FEET OF PARK AVE, INCLUDING JACK AND BORED HIGHWAY CROSSING.

NORTHBOUND PARK AVE IS CLOSED FROM DECATUR ST TO LAFAYETTE ST. DETOUR USING DECATUR ST, 3RD ST, AND LAFAYETTE ST.

TRAFFIC CONTROL NOTES

CONTRACTOR TO MAINTAIN DRIVEWAYS FOR LOCAL TRAFFIC.

CONTRACTOR TO MAINTAIN AT LEAST ONE 10 FT TRAVEL LANE ON PARK AVE AND ONE 12' TRAVEL LANE ON DECATUR ST AT ALL TIMES.

DURING NON–WORKING HOURS, FLASHING WARNING LIGHTS ARE REQUIRED ON ALL BARRICADES.

"FLAGGER AHEAD" SIGNS SHALL BE COVERED FOR NON–WORKING HOURS PER IL HIGHWAY STANDARD 701336–07.

IIW, P.C.
ARCHITECTURE
CIVIL ENGINEERING
CONSTRUCTION SERVICES
ENVIRONMENTAL ENGINEERING
LAND SURVEYING
MUNICIPAL ENGINEERING
STRUCTURAL ENGINEERING
TRANSPORTATION ENGINEERING
INTEGRITY.EXPERTISE.SOLUTIONS

© COPYRIGHT 2019
ALL RIGHTS RESERVED.
THESE DOCUMENTS HAVE BEEN PREPARED SPECIFICALLY FOR THIS PROJECT ONLY. NO PART OF THIS DOCUMENT MAY BE REPRODUCED OR DISTRIBUTED IN ANY FORM WITHOUT THE PERMISSION OF IIW, P.C. ALL INFORMATION IN THIS DOCUMENT IS CONSIDERED PROPERTY OF IIW, P.C.

Project Description

TRAFFIC CONTROL
DECATUR ST AND PARK AVE
CITY OF GALENA
EAST SIDE UTILITY
SYSTEM IMPROVEMENTS

P:\17\054\DRAWINGS\CIVIL\17054 ZZ 00 G – TRAFFIC CONTROL.DWG 12/13/2019 3:40 PM LYNN NEAL

Drawing Issue Information

Drawn By: MPA
Project Mgr: GTB
Issued For Bidding: 12-16-19 Issued For Construction: .

Rev	Description	Date	By

Sheet No:

G0.07

Project No: 17054

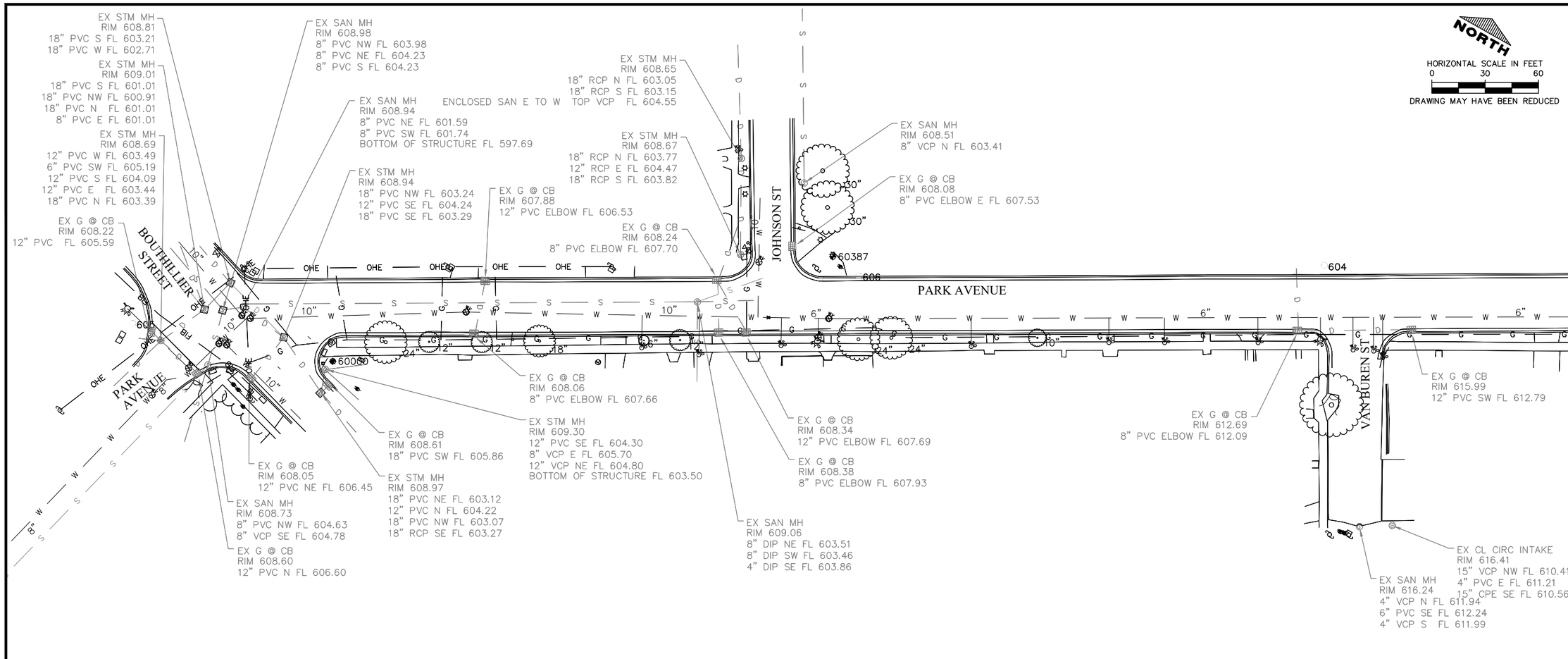

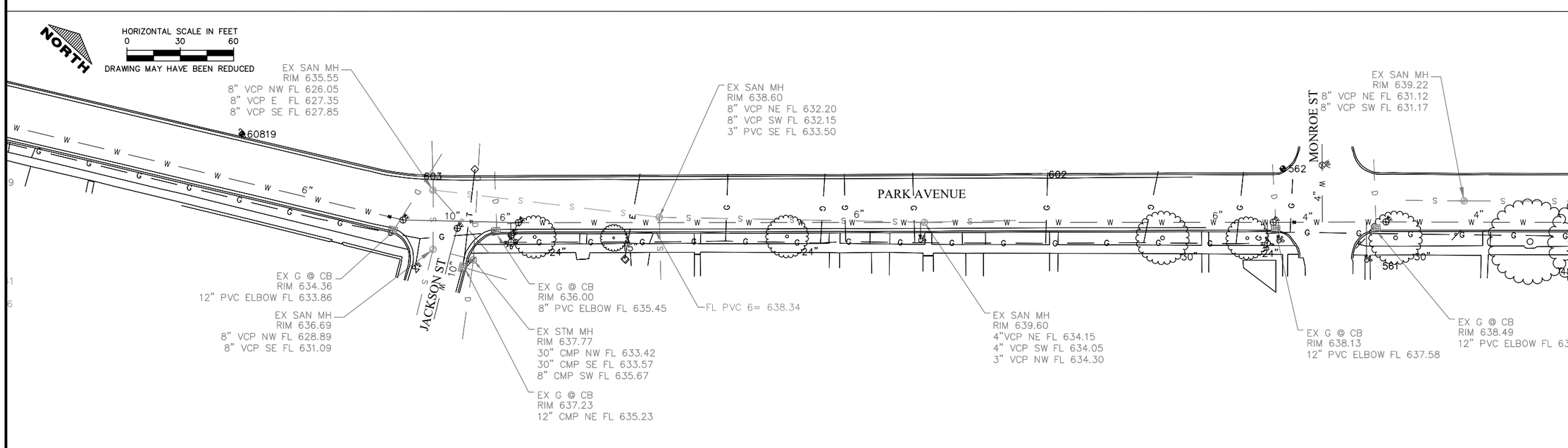

IIW, P.C.

iiw

ARCHITECTURE
CIVIL ENGINEERING
CONSTRUCTION SERVICES
ENVIRONMENTAL ENGINEERING
LAND SURVEYING
MUNICIPAL ENGINEERING
STRUCTURAL ENGINEERING
TRANSPORTATION ENGINEERING

INTEGRITY.EXPERTISE.SOLUTIONS

© COPYRIGHT 2019
ALL RIGHTS RESERVED.
THESE DOCUMENTS HAVE BEEN PREPARED SPECIFICALLY FOR THIS PROJECT ONLY. NO PART OF THIS DOCUMENT MAY BE REPRODUCED OR DISTRIBUTED IN ANY FORM WITHOUT THE PERMISSION OF IIW, P.C. ALL INFORMATION IN THIS DOCUMENT IS CONSIDERED PROPERTY OF IIW, P.C.

Project Description

EXISTING CONDITIONS

CITY OF GALENA
EAST SIDE UTILITY
SYSTEM IMPROVEMENTS

P:\17\054\DRAWINGS\CIVIL\17054 ZZ 01 P.DWG 12/13/2019 3:40 PM LYNN NEAL

Drawing Issue Information

Project Mgr: GTB
Issued For Bidding: 12-16-19
Drawn By: MPA
Issued For Construction:

Rev	Description	Date	By
.	.	.	.
.	.	.	.
.	.	.	.
.	.	.	.
.	.	.	.
.	.	.	.

Sheet No:

C1.01

Project No: 17054

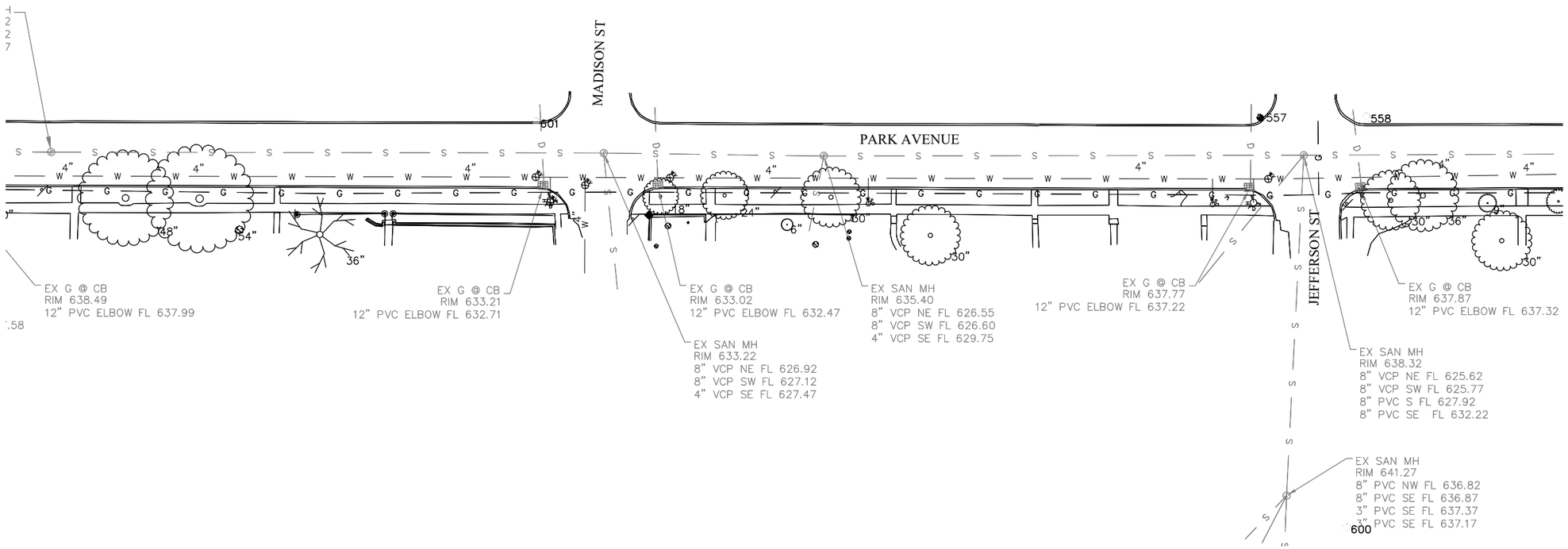

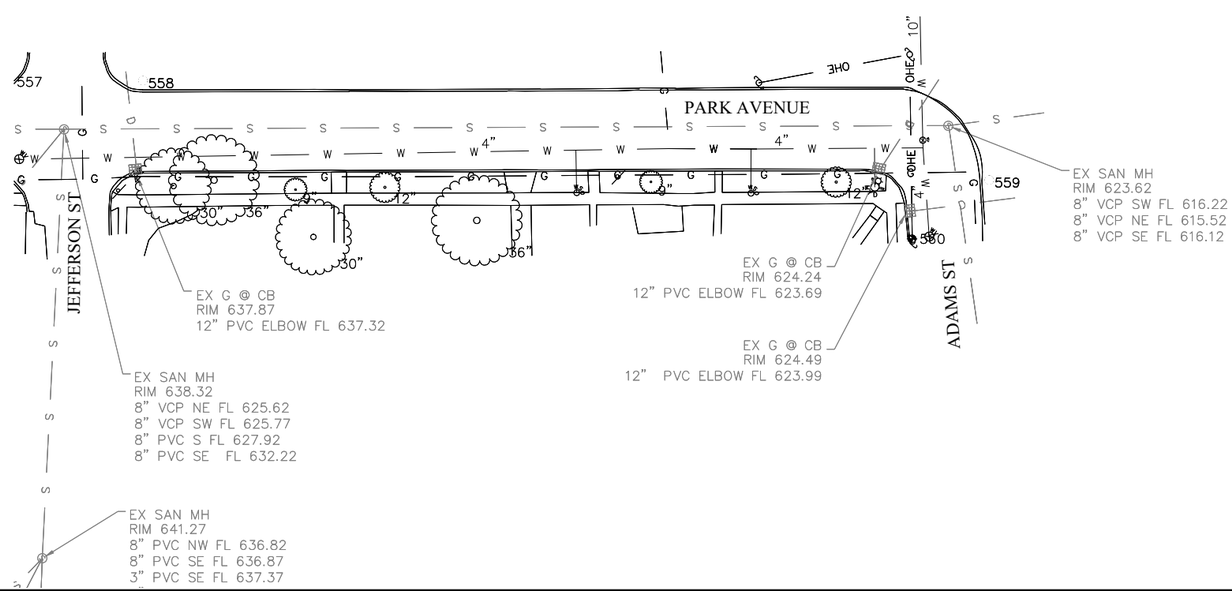

IIW, P.C.
iiw
ARCHITECTURE
CIVIL ENGINEERING
CONSTRUCTION SERVICES
ENVIRONMENTAL ENGINEERING
LAND SURVEYING
MUNICIPAL ENGINEERING
STRUCTURAL ENGINEERING
TRANSPORTATION ENGINEERING
INTEGRITY.EXPERTISE.SOLUTIONS

© COPYRIGHT 2019
ALL RIGHTS RESERVED.
THESE DOCUMENTS HAVE BEEN PREPARED SPECIFICALLY FOR THIS PROJECT ONLY. NO PART OF THIS DOCUMENT MAY BE REPRODUCED OR DISTRIBUTED IN ANY FORM WITHOUT THE PERMISSION OF IIW, P.C. ALL INFORMATION IN THIS DOCUMENT IS CONSIDERED PROPERTY OF IIW, P.C.

Project Description

EXISTING CONDITIONS

CITY OF GALENA
EAST SIDE UTILITY
SYSTEM IMPROVEMENTS

P:\17\054\DRAWINGS\CIVIL\17054 Z2 01 P.DWG 12/13/2019 3:40 PM LYNN NEAL

Drawing Issue Information

Drawn By: MPA
Project Mgr: GTB
Issued For Bidding: 12-16-19 Issued For Construction: .

Rev	Description	Date	By
.	.	.	.
.	.	.	.
.	.	.	.
.	.	.	.
.	.	.	.
.	.	.	.

Sheet No:

C1.02

Project No: 17054

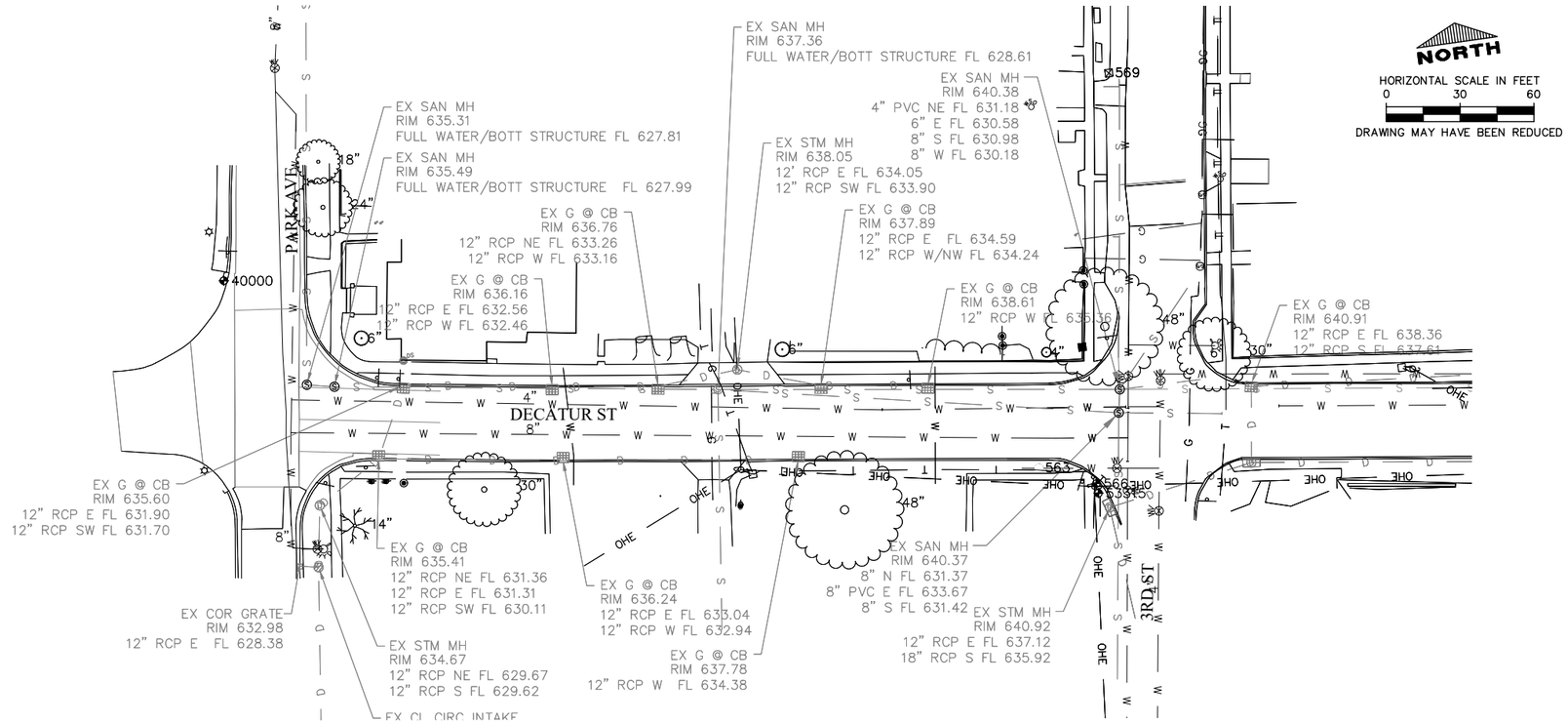

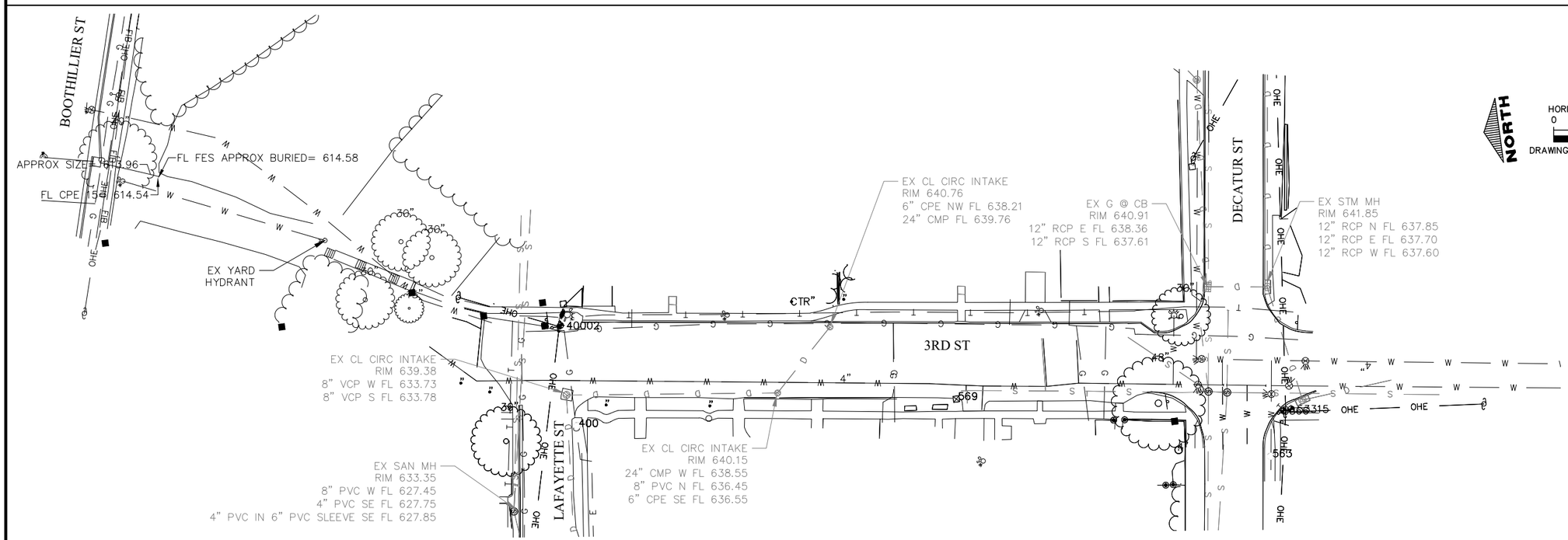

IIW, P.C.

ARCHITECTURE
CIVIL ENGINEERING
CONSTRUCTION SERVICES
ENVIRONMENTAL ENGINEERING
LAND SURVEYING
MUNICIPAL ENGINEERING
STRUCTURAL ENGINEERING
TRANSPORTATION ENGINEERING

INTEGRITY.EXPERTISE.SOLUTIONS

© COPYRIGHT 2019
ALL RIGHTS RESERVED.
THESE DOCUMENTS HAVE BEEN PREPARED SPECIFICALLY FOR THIS PROJECT ONLY. NO PART OF THIS DOCUMENT MAY BE REPRODUCED OR DISTRIBUTED IN ANY FORM WITHOUT THE PERMISSION OF IIW, P.C. ALL INFORMATION IN THIS DOCUMENT IS CONSIDERED PROPERTY OF IIW, P.C.

Project Description

EXISTING CONDITIONS

CITY OF GALENA
EAST SIDE UTILITY
SYSTEM IMPROVEMENTS

P:\17\054\DRAWINGS\CIVIL\17054_ZZ_01.DWG 12/13/2019 3:41 PM LYNN NEAL

Drawing Issue Information

Drawn By: MPA
Project Mgr: GTB
Issued For Bidding: 12-16-19 Issued For Construction: .

Rev	Description	Date	By
.	.	.	.
.	.	.	.
.	.	.	.
.	.	.	.
.	.	.	.
.	.	.	.

Sheet No:

C1.03

Project No: 17054

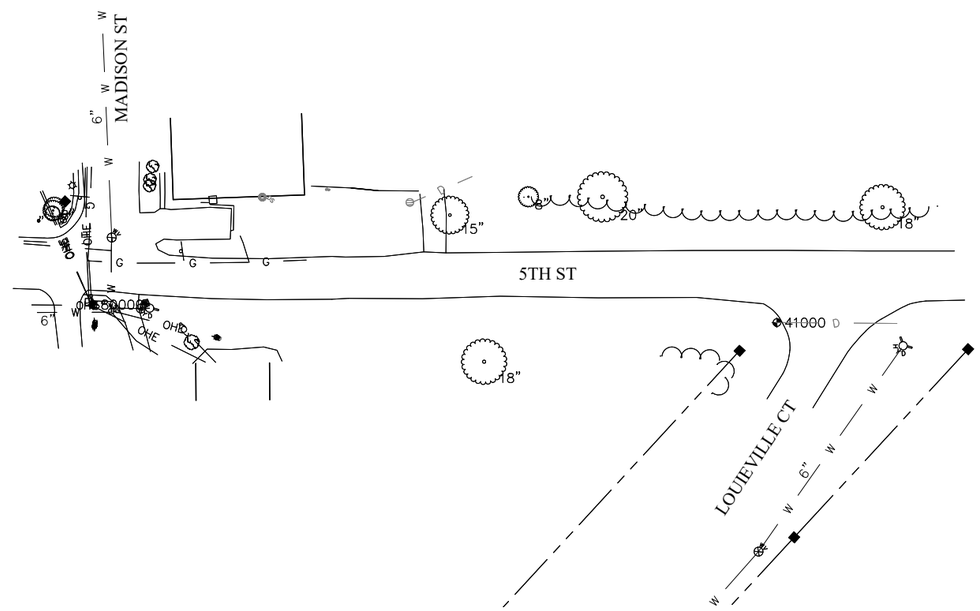

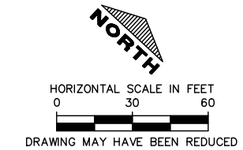

BENCH MARKS		
BENCHMARK NO.	ELEVATION	DESCRIPTION
557	638.40	B.M. RR SPIKE IN U POLE NW COR PARK&JEFFERSON
560	625.87	B.M. 1 RR SPIKE IN U POLE SW COR PARK&ADAMS
562	637.89	B.M. 3 RR SPIKE IN U POLE NW CORNER OF MONROE&PARK
565	658.78	B.M. FND MAG SPIKE IN U POLE SE COR 4TH&DECATUR
566	641.52	B.M. 7 SET RR SPIKE IN U POLE SW CORNER DECATUR&3RD
40000	637.67	B.M. PLUG
40001	634.53	B.M. X ON NORTH BOLT
40002	641.77	B.M. SET RR SPIKE PP
41000	730.37	B.M. 1 CUT X
53315	640.65	B.M.
60000	610.58	B.M. 6 RR SPIKE IN NORTH SIDE UPOLE
60387	609.35	B.M. 5 CXS SOUTH SIDE LIGHTPOLE BASE
60819	629.93	B.M. 4
80000	762.65	B.M. 2 RR SPIKE PPOLE

HORIZONTAL CONTROL				
POINT NO.	NORTHING	EASTING	ELEVATION	DESCRIPTION
400	2092422.50	2226139.03	638.70	CONTROL POINT REBAR 3/8
450	2093289.00	2228303.78	727.69	CONTROL POINT REBAR 5/8 X 30
451	2093088.76	2228125.30	760.12	CONTROL POINT REBAR 5/8 X 30
452	2093152.43	2228206.09	749.11	CONTROL POINT REBAR 3/8 X 15
558	2094136.74	2227624.98	637.73	CONTROL POINT REBAR 3/8X18
559	2094337.31	2227896.28	624.16	CONTROL POINT REBAR 3/8X18
561	2093616.02	2227147.70	640.26	CONTROL POINT REBAR 3/8X18
563	2092074.30	2226076.55	640.14	CONTROL POINT REBAR 3/8X18
564	2092055.88	2226515.15	658.78	CONTROL POINT REBAR 3/8X18
567	2092483.60	2225800.74	630.69	CONTROL POINT NAIL MAG
569	2092229.12	2226126.84	641.26	CONTROL POINT NAIL MAG
600	2093980.59	2227757.97	640.94	CONTROL POINT REBAR 5\8X24
601	2093851.47	2227324.54	632.88	CONTROL POINT REBAR 5\8X24
602	2093525.28	2226975.77	638.42	CONTROL POINT REBAR 5/8X24
603	2093284.22	2226720.26	634.84	CONTROL POINT REBAR 5/8X24
604	2093113.96	2226418.68	613.47	CONTROL POINT REBAR 5/8X24
605	2092754.27	2225852.59	608.97	CONTROL POINT REBAR 5/8X24
606	2092979.42	2226194.08	608.92	CONTROL POINT REBAR 5/8X24

IIW, P.C.
ARCHITECTURE
CIVIL ENGINEERING
CONSTRUCTION SERVICES
ENVIRONMENTAL ENGINEERING
LAND SURVEYING
MUNICIPAL ENGINEERING
STRUCTURAL ENGINEERING
TRANSPORTATION ENGINEERING
INTEGRITY.EXPERTISE.SOLUTIONS

© COPYRIGHT 2019
ALL RIGHTS RESERVED.
THESE DOCUMENTS HAVE BEEN PREPARED SPECIFICALLY FOR THIS PROJECT ONLY. NO PART OF THIS DOCUMENT MAY BE REPRODUCED OR DISTRIBUTED IN ANY FORM WITHOUT THE PERMISSION OF IIW, P.C. ALL INFORMATION IN THIS DOCUMENT IS CONSIDERED PROPERTY OF IIW, P.C.

Project Description
EXISTING CONDITIONS

CITY OF GALENA
EAST SIDE UTILITY
SYSTEM IMPROVEMENTS

P:\17\054\DRAWINGS\CIVIL\17054-ZZ-01-P.DWG 12/13/2019 3:41 PM LYNN NEAL

Drawing Issue Information
Project Mgr: GTB
Drawn By: MPA
Issued For Bidding: 12-16-19 Issued For Construction: . .

Rev	Description	Date	By
.	.	.	.
.	.	.	.
.	.	.	.
.	.	.	.
.	.	.	.
.	.	.	.

Sheet No:
C1.04
Project No: 17054

SITE DESCRIPTION

1. THIS STORM WATER POLLUTION PREVENTION PLAN (SWPPP) IS FOR CONSTRUCTION ACTIVITIES ASSOCIATED WITH THE CONSTRUCTION OF WATER MAIN, INCLUDING CLEARING, EXCAVATION AND GRADING, GRADING FOR ROADWAY, AND PREPARATION FOR SEEDING, LOCATED IN NE 1/4, SEC. 24, T.28N., R.1W., JO DAVIESS COUNTY, ILLINOIS.

2. THIS SWPPP COVERS AN ESTIMATED 5.3 ACRES WITH AN ESTIMATED 2.3 ACRES BEING DISTURBED.

3. THE SWPPP IS LOCATED PRIMARILY IN THE MEDARY AND DORCHESTER SOIL SERIES. THE ESTIMATED RUNOFF COEFFICIENT (C) FOR THE SITE AFTER COMPLETION WILL BE 0.7.

4. REFER TO SHEETS C2.10–C2.14 FOR SITE MAP INDICATING DRAINAGE PATTERNS, TYPICAL SLOPES, AREAS OF SOIL DISTURBANCE, MAJOR STRUCTURAL AND NONSTRUCTURAL CONTROLS, ETC.

5. RUNOFF FROM THIS SITE WILL BE DISCHARGED TO THE GALENA RIVER.

CONTROLS

1. PRIOR TO BEGINNING GRADING, EXCAVATION OR CLEARING AND GRUBBING OPERATIONS, SILT FENCE SHALL BE PLACED ALONG THE PERIMETER OF ALL AREAS TO BE DISTURBED AT ANY LOCATION WHERE RUNOFF CAN MOVE OFFSITE.

2. VEGETATION IN AREAS NOT INCLUDED IN THE CONSTRUCTION AREA SHALL BE PRESERVED.

3. AS AREAS REACH THEIR FINAL GRADE, THE LOCATION OF EROSION CONTROLS MAY NEED TO BE CHANGED OR ADDITIONAL CONTROLS MAY NEED TO BE PLACED.

4. OFF–SITE VEHICLE TRACKING OF SEDIMENTS SHALL BE MINIMIZED. ROADWAYS ADJACENT TO THE PROJECT SITE SHALL BE CLEANED OF SEDIMENT DAILY.

5. STABILIZATION PRACTICES, INCLUDING TEMPORARY OR PERMANENT SEEDING AND/OR MULCHING, GEOTEXTILES, SOD STABILIZATION, AND/OR VEGETATED BUFFER STRIPS SHALL BE INITIATED ON ALL DISTURBED AREAS IMMEDIATELY WHENEVER ANY CLEARING, GRADING, EXCAVATING, OR OTHER EARTH DISTURBING ACTIVITIES HAVE TEMPORARILY OR PERMANENTLY CEASED ON ANY PORTION OF THE SITE AND WILL NOT RESUME FOR A PERIOD OF 14 CALENDAR DAYS. STABILIZATION OF DISTURBED AREAS MUST BE INITIATED WITHIN 1 WORKING DAY OF TEMPORARY OR PERMANENT CESSATION OF EARTH DISTURBING ACTIVITIES AND SHALL BE COMPLETED AS SOON AS POSSIBLE BUT NO LATER THAN 14 DAYS FROM THE INITIATION OF STABILIZATION WORK NI AN AREA.

6. CONTRACTOR DISPOSAL OF UNUSED CONSTRUCTION MATERIALS AND CONSTRUCTION MATERIAL WASTES SHALL COMPLY WITH APPLICABLE STATE AND LOCAL WASTE DISPOSAL, SANITARY SEWER OR SEPTIC SYSTEM REGULATIONS.

7. STOCKPILE AREAS WHICH REMAIN FOR MORE THAN 7 DAYS SHALL BE SEEDED, MULCHED AND ENCLOSED BY SILT FENCE.

8. SLOPES STEEPER THAN 10:1 AND LONGER THAN 20 FEET SHALL BE PROTECTED BY A SHORT TERM EROSION CONTROL BLANKET.

9. DUST CONTROL MEASURES SHALL BE EMPLOYED IF DUST IS CREATED AND THERE IS POTENTIAL FOR AIR AND/OR WATER POLLUTION FROM DUST TRANSPORTED BY WINDS. DUST CONTROL MEASURES SUCH AS SPRINKLING/IRRIGATION, MULCHING, OR OTHER APPROPRIATE MEASURES SHALL BE EMPLOYED AS NECESSARY.

10. THE CONTRACTOR SHALL PLACE ANY OTHER CONTROLS CONSISTENT WITH CURRENT BMP'S AS DEEMED NECESSARY TO CONTROL RUNOFF FROM EXPOSED SITES.

11. THE WORK WILL BE COMPLETED WITH THE ESTABLISHMENT OF PERMANENT PERENNIAL VEGETATION WITH A DENSITY OF 70% OR EQUIVALENT STABILIZATION MEASURES ON ALL DISTURBED AREAS.

12. CONTRACTOR MAY LOCATE A PORTABLE REST ROOM FACILITY ONSITE IN A LOCATION WHERE CONTACT WITH STORM WATER DISCHARGE IS MINIMIZED. WASTES SHALL BE COLLECTED AND DISPOSED OF IN COMPLIANCE WITH LOCAL AND STATE REGULATIONS.

MAINTENANCE

1. THE CONTRACTOR IS REQUIRED TO MAINTAIN ALL TEMPORARY EROSION CONTROL MEASURES IN PROPER WORKING ORDER, INCLUDING CLEANING, REPAIRING OR REPLACING THEM THROUGHOUT THE CONTRACT PERIOD. CLEANING OF SILT CONTROL DEVICES SHALL BEGIN WHEN THE FEATURES HAVE LOST 50% OF THEIR CAPACITY OR WHEN THE SEDIMENT LEVEL REACHES 1/3 OF THE BARRIER HEIGHT.

INSPECTIONS

1. QUALIFIED PERSONNEL (PROVIDED BY THE DISCHARGER) SHALL INSPECT DISTURBED AREAS OF THE CONSTRUCTION SITE THAT HAVE NOT BEEN STABILIZED WITH A PERENNIAL, VEGETATIVE COVER OF SUFFICIENT DENSITY TO PRECLUDE EROSION AT LEAST ONCE EVERY SEVEN CALENDAR DAYS.

2. DISTURBED AREAS AND AREAS USED FOR STORAGE OF MATERIALS SHALL BE INSPECTED FOR EVIDENCE OF POLLUTANTS ENTERING THE DRAINAGE SYSTEM. EROSION AND SEDIMENT CONTROL MEASURES SHALL BE OBSERVED TO ENSURE THAT THEY ARE OPERATING PROPERLY. LOCATIONS WHERE VEHICLES ENTER OR EXIT THE SITE SHALL BE INSPECTED FOR OFFSITE SEDIMENT TRACKING. DISCHARGE LOCATIONS SHALL BE INSPECTED TO ASCERTAIN WHETHER EROSION CONTROL MEASURES ARE EFFECTIVE IN PREVENTING SIGNIFICANT IMPACTS TO RECEIVING WATERS.

3. THE CONTRACTOR SHALL IMMEDIATELY BEGIN CORRECTIVE ACTION ON ALL DEFICIENCIES FOUND.

4. THIS INSPECTION MAY REQUIRE REVISIONS TO THE DESCRIPTION OF POTENTIAL POLLUTANT SOURCES AND POLLUTION PREVENTION MEASURES IDENTIFIED IN THE PLAN. THE CONTRACTOR SHALL IMPLEMENT ALL REVISIONS TO THE PLAN DEEMED NECESSARY AND COMPLETE SUCH CHANGES TO THE PLAN WITHIN 7 CALENDAR DAYS OF THE INSPECTION.

5. A WRITTEN REPORT SUMMARIZING THE SCOPE OF THE INSPECTION, THE NAMES AND QUALIFICATIONS OF THE INSPECTORS, THE DATE, AND THE OBSERVATIONS MADE AND ACTIONS TAKEN SHALL BE MADE AND RETAINED AS PART OF THE SWPPP. THE REPORT SHALL BE SIGNED IN ACCORDANCE WITH PART VI.G OF THE PERMIT.

CERTIFICATION

1. THE PLAN SHALL BE SIGNED IN ACCORDANCE WITH THE REQUIREMENTS OF THE NPDES GENERAL PERMIT NO. 2 AND BE RETAINED AT THE CONSTRUCTION SITE FROM THE DATE CONSTRUCTION ACTIVITIES BEGIN TO THE DATE OF FINAL STABILIZATION.

2. ALL CONTRACTORS AND SUBCONTRACTORS WHOSE WORK IS A SOURCE OF POTENTIAL POLLUTION AS DEFINED IN THIS SWPPP MUST SIGN THE CERTIFICATION STATEMENT.

OWNER'S CERTIFICATION

I CERTIFY UNDER PENALTY OF LAW THAT THIS DOCUMENT AND ALL ATTACHMENTS WERE PREPARED UNDER MY DIRECTION OR SUPERVISION IN ACCORDANCE WITH A SYSTEM DESIGNED TO ASSURE THAT QUALIFIED PERSONNEL PROPERLY GATHERED AND EVALUATED THE INFORMATION SUBMITTED. BASED ON MY INQUIRY OF THE PERSON OR PERSONS WHO MANAGE THE SYSTEM, OR THOSE PERSONS DIRECTLY RESPONSIBLE FOR GATHERING THE INFORMATION, THE INFORMATION SUBMITTED IS, TO THE BEST OF MY KNOWLEDGE AND BELIEF, TRUE ACCURATE, AND COMPLETE. I AM AWARE THAT THERE ARE SIGNIFICANT PENALTIES FOR SUBMITTING FALSE INFORMATION, INCLUDING THE POSSIBILITY OF FINE AND IMPRISONMENT FOR KNOWING VIOLATIONS.

NAME: _____ TITLE: _____
PRINTED

SIGNATURE: _____ DATE: _____

CONTRACTOR'S CERTIFICATION

I CERTIFY UNDER PENALTY OF LAW THAT I UNDERSTAND THE TERMS AND CONDITIONS OF THE GENERAL NATIONAL POLLUTANT DISCHARGE ELIMINATION SYSTEM (NPDES) PERMIT (ILR10) THAT AUTHORIZES THE STORM WATER DISCHARGES ASSOCIATED WITH INDUSTRIAL ACTIVITY FROM THE CONSTRUCTION SITE AS PART OF THIS CERTIFICATION.

CONSTRUCTION ACTIVITY ASSOCIATED WITH THE CONSTRUCTION OF CITY OF GALENA UTILITIES SYSTEMS IMPROVEMENTS 2018, JO DAVIESS COUNTY, ILLINOIS.

_____
NAME TITLE DATE
CONTRACTING FIRM: _____
ADDRESS: _____ TELEPHONE: _____

_____
NAME TITLE DATE
CONTRACTING FIRM: _____
ADDRESS: _____ TELEPHONE: _____

KEEPING PLANS CURRENT

THIS SWPPP WAS PREPARED PRIOR TO THE COMMENCEMENT OF SOIL DISTURBING ACTIVITIES. THE PERMITTEE SHALL AMEND THE PLAN WHENEVER THERE IS A CHANGE IN DESIGN, CONSTRUCTION, OPERATION, OR MAINTENANCE, WHICH HAS A SIGNIFICANT EFFECT ON THE POTENTIAL FOR THE DISCHARGE OF POLLUTANTS TO THE WATERS OF THE UNITED STATES AND WHICH HAS NOT BEEN ADDRESSED IN THE PLAN OR IF THE SWPPP PROVES TO BE INEFFECTIVE. SEE PART IV.C OF THE PERMIT FOR COMPLETE REQUIREMENTS REGARDING UPDATING OF THE SWPPP.

GENERAL NOTES

1. ALL CONTRACTORS/SUBCONTRACTORS SHALL CONDUCT THEIR OPERATIONS IN A MANNER THAT MINIMIZES EROSION AND PREVENTS SEDIMENT FROM LEAVING THE PROJECT SITE. THE PRIME CONTRACTOR SHALL BE RESPONSIBLE FOR COMPLIANCE AND IMPLEMENTATION OF THE STORM WATER POLLUTION PREVENTION PLAN (SWPPP) FOR THEIR ENTIRE CONTRACT. THIS RESPONSIBILITY SHALL BE FURTHER SHARED WITH SUBCONTRACTORS WHOSE WORK IS A SOURCE OF POTENTIAL POLLUTION AS DEFINED IN THIS SWPPP.

2. A "NOTICE OF INTENT FOR NPDES COVERAGE UNDER GENERAL PERMIT NO. 2" HAS BEEN FILED WITH THE ILLINOIS ENVIRONMENTAL PROTECTION AGENCY.

3. NOTICE OF DISCONTINUATION
WITHIN 30 DAYS AFTER FINAL STABILIZATION, THE OPERATOR OR OWNER OF THE FACILITY SHALL SUBMIT A NOTICE OF DISCONTINUATION TO THE ILLINOIS ENVIRONMENTAL PROTECTION AGENCY.

4. NON–STORM WATER DISCHARGES
NON–STORM DISCHARGES MAY OCCUR FROM SUBSURFACE DRAINS INCORPORATED INTO THE PROJECT. THESE DISCHARGES WILL BE CONTROLLED BY STABILIZED OUTLETS.

SEQUENCE

1. INSTALL CONSTRUCTION ENTRANCE AND CONCRETE WASHOUT AT BEST LOCATION FOR STAGING AND PHASING
2. PLACE PERIMETER AND DOWNSLOPE CONTROLS
3. PROCEED WITH GRADING AND EXCAVATION
4. COVER OR STABILIZE DISTURBED AREAS AS SOON AS POSSIBLE
5. SEED DISTURBED AREA AS SOON AS POSSIBLE ONCE IT IS BROUGHT TO FINAL GRADE
6. MAINTAIN ALL TEMPORARY PERIMETER CONTROLS UNTIL ALL UPSTREAM AREAS ARE FINALLY STABILIZED

IIW, P.C.
iiw
ARCHITECTURE
CIVIL ENGINEERING
CONSTRUCTION SERVICES
ENVIRONMENTAL ENGINEERING
LAND SURVEYING
MUNICIPAL ENGINEERING
STRUCTURAL ENGINEERING
TRANSPORTATION ENGINEERING
INTEGRITY.EXPERTISE.SOLUTIONS

© COPYRIGHT 2019
ALL RIGHTS RESERVED.
THESE DOCUMENTS HAVE BEEN PREPARED SPECIFICALLY FOR THIS PROJECT ONLY. NO PART OF THIS DOCUMENT MAY BE REPRODUCED OR DISTRIBUTED IN ANY FORM WITHOUT THE PERMISSION OF IIW, P.C. ALL INFORMATION IN THIS DOCUMENT IS CONSIDERED PROPERTY OF IIW, P.C.

Project Description
EROSION CONTROL NOTES

CITY OF GALENA
EAST SIDE UTILITY
SYSTEM IMPROVEMENTS

P:\17\054\DRAWINGS\CIVIL\17054 ZZ 02.DWG 12/13/2019 3:41 PM LYNN NEAL

Drawing Issue Information
Drawn By: MPA
Project Mgr: GTB
Issued For Bidding: 12-16-19 Issued For Construction: .

Rev	Description	Date	By
.	.	.	.
.	.	.	.
.	.	.	.
.	.	.	.
.	.	.	.
.	.	.	.

Sheet No:
C2.01
Project No: 17054

NOTES:
1. WASHOUT FACILITY SHALL NOT BE LOCATED WITHIN 50 FEET OF STORM DRAINS, OPEN DITCHES OR WATERBODIES.
2. WASHOUT FACILITIES MUST BE CLEANED OR NEW FACILITIES CONSTRUCTED ONCE THE FACILITY IS 75% FULL. HARDENED CONCRETE SHALL BE REMOVED AND DISPOSED OF. IF THE FACILITY IS TO BE REUSED, LINE THE STRUCTURE WITH NEW 10 MIL POLYETHYLENE SHEETING FREE OF HOLES OR TEARS.
3. A SIGN SHALL BE POSTED ADJACENT TO THE FACILITY TO INFORM CONCRETE EQUIPMENT OPERATORS OF THE FACILITY OR THE JOB SITE SUPERINTENDENT SHALL ENSURE THAT CONCRETE EQUIPMENT OPERATORS USE THE WASHOUT FACILITY.
4. IF NECESSARY, A CRUSHED STONE PATH SHALL BE CONSTRUCTED TO PROVIDE EASE OF ACCESS FOR EQUIPMENT.
5. WHEN THE FACILITY IS NO LONGER REQUIRED, THE HARDENED CONCRETE SHALL BE REMOVED AND DISPOSED OF, THE MATERIALS USED TO CONSTRUCT THE FACILITY SHALL BE REMOVED, AND THE HOLE BACKFILLED AND THE SURROUNDING AREA REPAIRED.

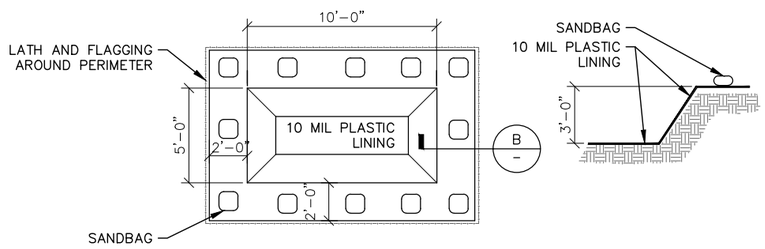

6 C2.02 TEMPORARY CONCRETE WASHOUT
NOT TO SCALE

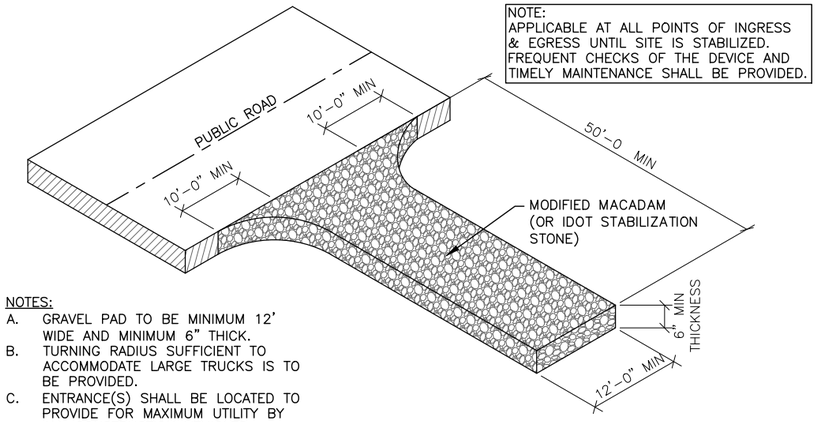

NOTE:
APPLICABLE AT ALL POINTS OF INGRESS & EGRESS UNTIL SITE IS STABILIZED. FREQUENT CHECKS OF THE DEVICE AND TIMELY MAINTENANCE SHALL BE PROVIDED.

NOTES:
A. GRAVEL PAD TO BE MINIMUM 12' WIDE AND MINIMUM 6" THICK.
B. TURNING RADIUS SUFFICIENT TO ACCOMMODATE LARGE TRUCKS IS TO BE PROVIDED.
C. ENTRANCE(S) SHALL BE LOCATED TO PROVIDE FOR MAXIMUM UTILITY BY ALL CONSTRUCTION VEHICLES.
D. MUST BE MAINTAINED IN A CONDITION WHICH WILL PREVENT TRACKING OR DIRECT FLOW OF MUD ONTO STREETS. PERIODIC TOP DRESSING WITH STONE IS REQUIRED.
E. ANY TRACKED MATERIAL ON THE PUBLIC ROAD MUST BE CLEANED UP DAILY.

5 C2.02 TEMPORARY CONSTRUCTION ENTRANCE
NOT TO SCALE

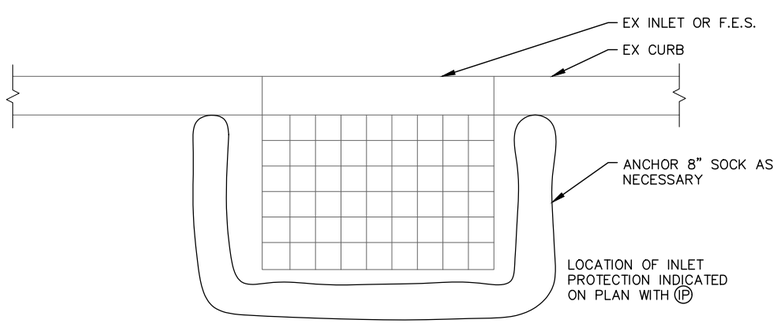

16 C2.02 TEMPORARY INLET PROTECTION
NOT TO SCALE

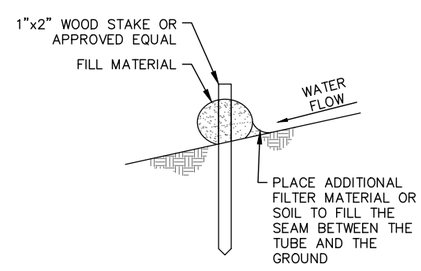

18 C2.02 TEMPORARY FILTER SOCK
NOT TO SCALE

GENERAL NOTES:
1. PROTECTION SHOWN IS TYPICAL FOR SLOPES FLATTER THAN 3:1. FOR STEEPER SLOPES, INCREASE SIZE AS DIRECTED BY THE ENGINEER.
2. FILTER SOCKS SHALL BE CONTINUOUS, TUBULAR, KNITTED MESH NETTING WITH ⅜ INCH OPENINGS, CONSTRUCTED OF A 5 MIL THICKNESS PHOTODEGRADEABLE 8" MINIMUM DIAMETER HDPE.
3. FOR INLET PROTECTION, USE A CONTINUOUS TUBULAR KNITTED MESH NETTING WITH ⅜ INCH OPENINGS, CONSTRUCTED OF 500 DENIER POLYPROPYLENE.
4. FILTER MATERIAL FOR USE IN SOCK AS SPECIFIED:
   A. USE MATERIAL DERIVED FROM WOOD, BARK, OR OTHER NIN-TOXIC VEGETATIVE FEEDSTOCKS.
   B. USE MATERIALS WITH NO VISIBLE ADMIXTURE OF ANY MATERIAL TOXIC TO PLANT GROWTH.
   C. USE MATERIALS MEETING THE FOLLOWING PARTICLE SIZES: 100% PASSING THE 2" SIEVE SIZE, 90-100% PASSING THE 1" SIEVE SIZE, AND 0-30% PASSING THE ⅜" SIEVE SIZE.
   D. THE TARGET FLOW RATE OF IN-PLACE MATERIAL IS 10 GAL/MIN/LF.

IIW, P.C.
iiw
ARCHITECTURE
CIVIL ENGINEERING
CONSTRUCTION SERVICES
ENVIRONMENTAL ENGINEERING
LAND SURVEYING
MUNICIPAL ENGINEERING
STRUCTURAL ENGINEERING
TRANSPORTATION ENGINEERING
INTEGRITY.EXPERTISE.SOLUTIONS

© COPYRIGHT 2019
ALL RIGHTS RESERVED.
THESE DOCUMENTS HAVE BEEN PREPARED SPECIFICALLY FOR THIS PROJECT ONLY. NO PART OF THIS DOCUMENT MAY BE REPRODUCED OR DISTRIBUTED IN ANY FORM WITHOUT THE PERMISSION OF IIW, P.C. ALL INFORMATION IN THIS DOCUMENT IS CONSIDERED PROPERTY OF IIW, P.C.

Project Description
EROSION CONTROL DETAILS
CITY OF GALENA
EAST SIDE UTILITY
SYSTEM IMPROVEMENTS

P:\17-054\DRAWINGS\CIVIL\17054 Z2 02 P.DWG 12/13/2019 3:42 PM LYNN NEAL

Drawing Issue Information
Project Mgr: GTB
Drawn By: MPA
Issued For Bidding: 12-16-19 Issued For Construction: .

Rev	Description	Date	By
.	.	.	.
.	.	.	.
.	.	.	.
.	.	.	.
.	.	.	.
.	.	.	.

Sheet No:
C2.02
Project No: 17054

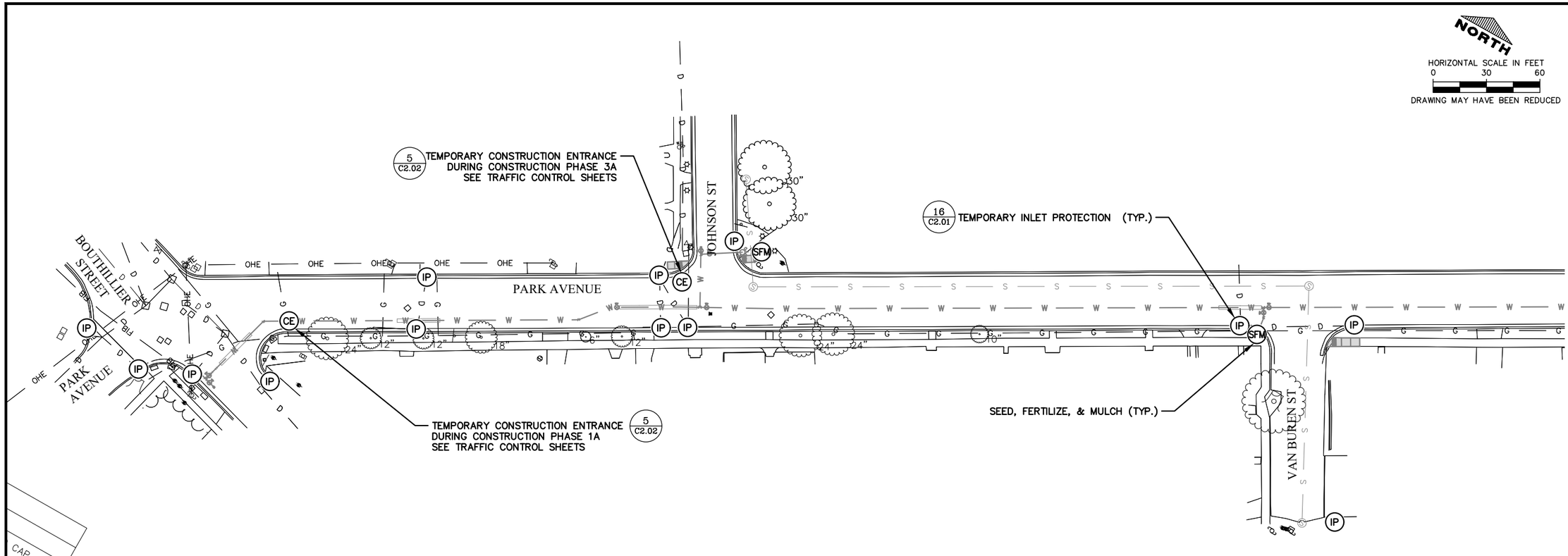

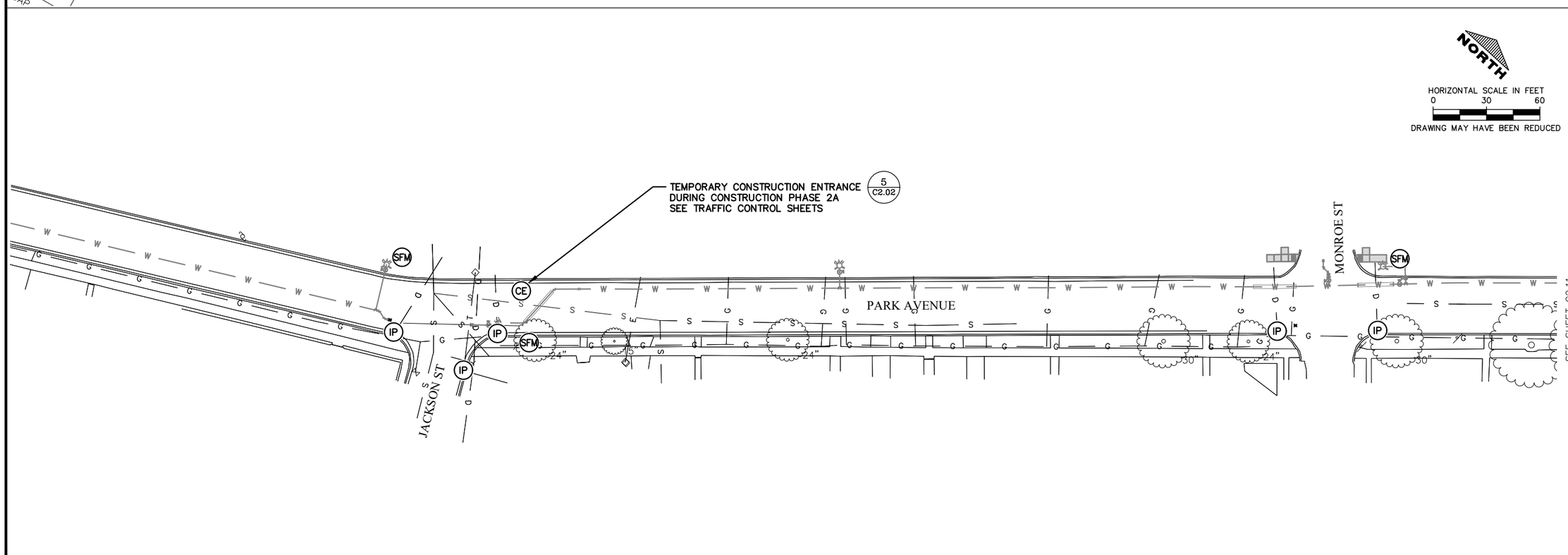

IIW, P.C.

ARCHITECTURE
CIVIL ENGINEERING
CONSTRUCTION SERVICES
ENVIRONMENTAL ENGINEERING
LAND SURVEYING
MUNICIPAL ENGINEERING
STRUCTURAL ENGINEERING
TRANSPORTATION ENGINEERING

INTEGRITY.EXPERTISE.SOLUTIONS

© COPYRIGHT 2019
ALL RIGHTS RESERVED.
THESE DOCUMENTS HAVE BEEN PREPARED SPECIFICALLY FOR THIS PROJECT ONLY. NO PART OF THIS DOCUMENT MAY BE REPRODUCED OR DISTRIBUTED IN ANY FORM WITHOUT THE PERMISSION OF IIW, P.C. ALL INFORMATION IN THIS DOCUMENT IS CONSIDERED PROPERTY OF IIW, P.C.

Project Description

EROSION CONTROL PLAN

CITY OF GALENA
EAST SIDE UTILITY
SYSTEM IMPROVEMENTS

P:\17\054\DRAWINGS\CIVIL\17054_Z2_02_P.DWG 12/13/2019 3:42 PM LYNN NEAL

Drawing Issue Information

Project Mgr: GTB
Drawn By: MPA
Issued For Bidding: 12-16-19 Issued For Construction: .

Rev	Description	Date	By
.	.	.	.
.	.	.	.
.	.	.	.
.	.	.	.
.	.	.	.
.	.	.	.

Sheet No:

C2.10

Project No: 17054

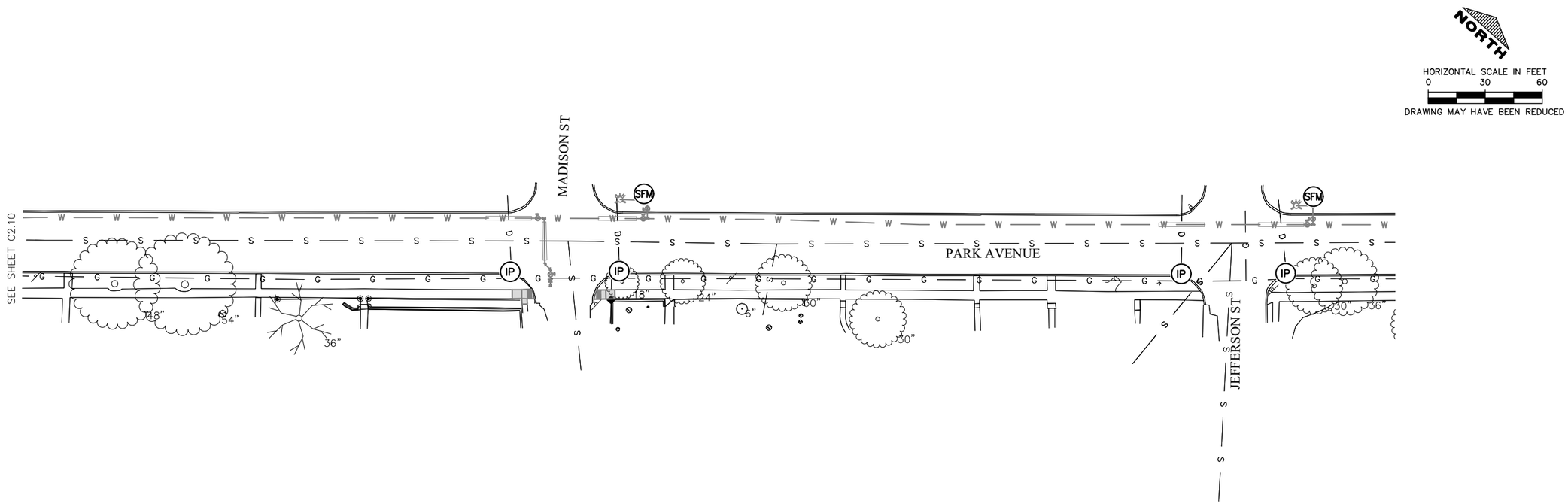

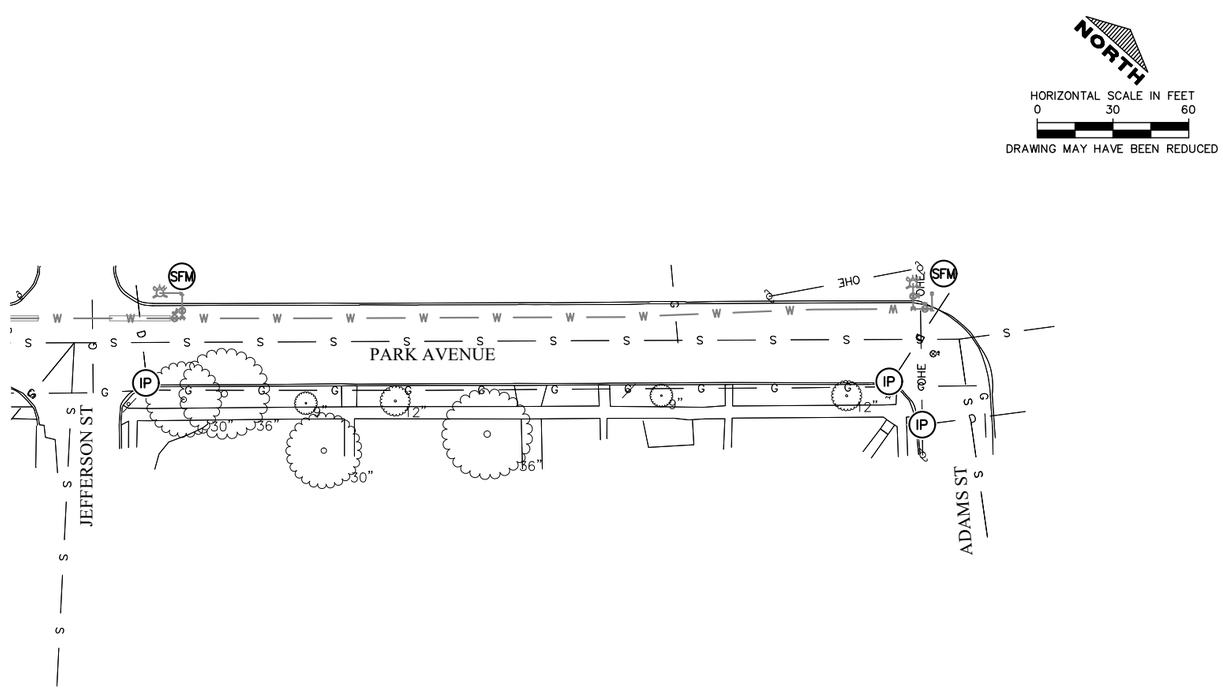

IIW, P.C.

ARCHITECTURE
CIVIL ENGINEERING
CONSTRUCTION SERVICES
ENVIRONMENTAL ENGINEERING
LAND SURVEYING
MUNICIPAL ENGINEERING
STRUCTURAL ENGINEERING
TRANSPORTATION ENGINEERING

INTEGRITY.EXPERTISE.SOLUTIONS

© COPYRIGHT 2019
ALL RIGHTS RESERVED.
THESE DOCUMENTS HAVE BEEN PREPARED SPECIFICALLY FOR THIS PROJECT ONLY. NO PART OF THIS DOCUMENT MAY BE REPRODUCED OR DISTRIBUTED IN ANY FORM WITHOUT THE PERMISSION OF IIW, P.C. ALL INFORMATION IN THIS DOCUMENT IS CONSIDERED PROPERTY OF IIW, P.C.

Project Description

EROSION CONTROL PLAN

CITY OF GALENA
EAST SIDE UTILITY
SYSTEM IMPROVEMENTS

P:\17\054\DRAWINGS\CIVIL\17054 ZZ 02 P.DWG 12/13/2019 3:42 PM LYNN NEAL

Drawing Issue Information

Drawn By: MPA
Project Mgr: GTB
Issued For Bidding: 12-16-19 Issued For Construction:

Rev.	Description	Date	By

Sheet No:

C2.11

Project No: 17054

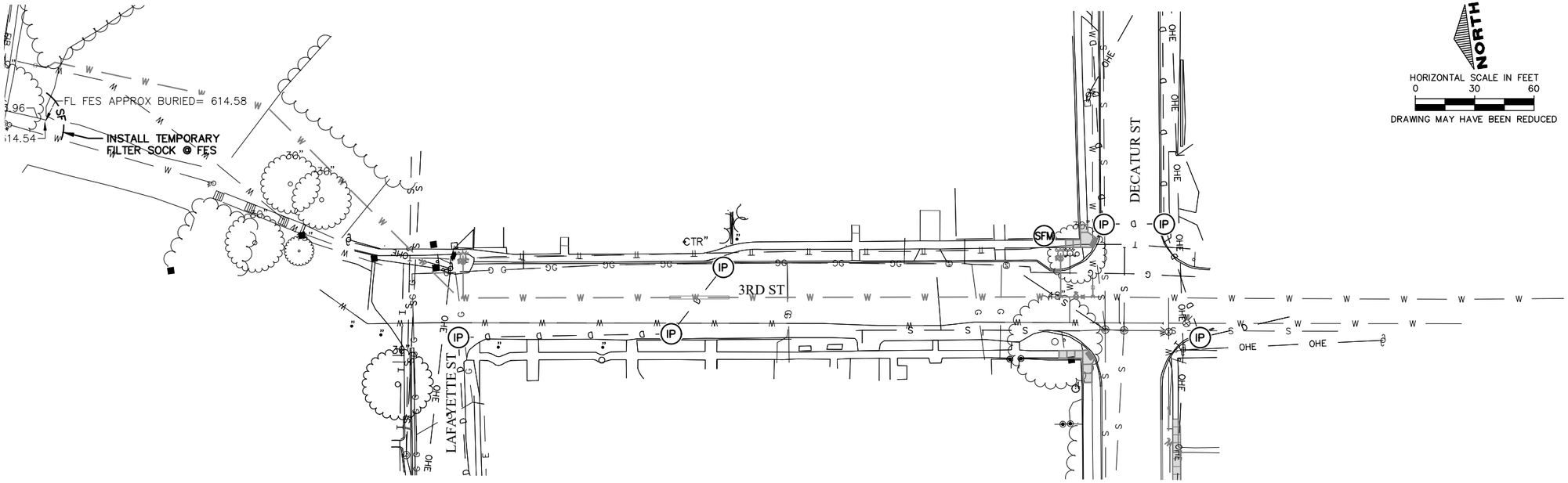

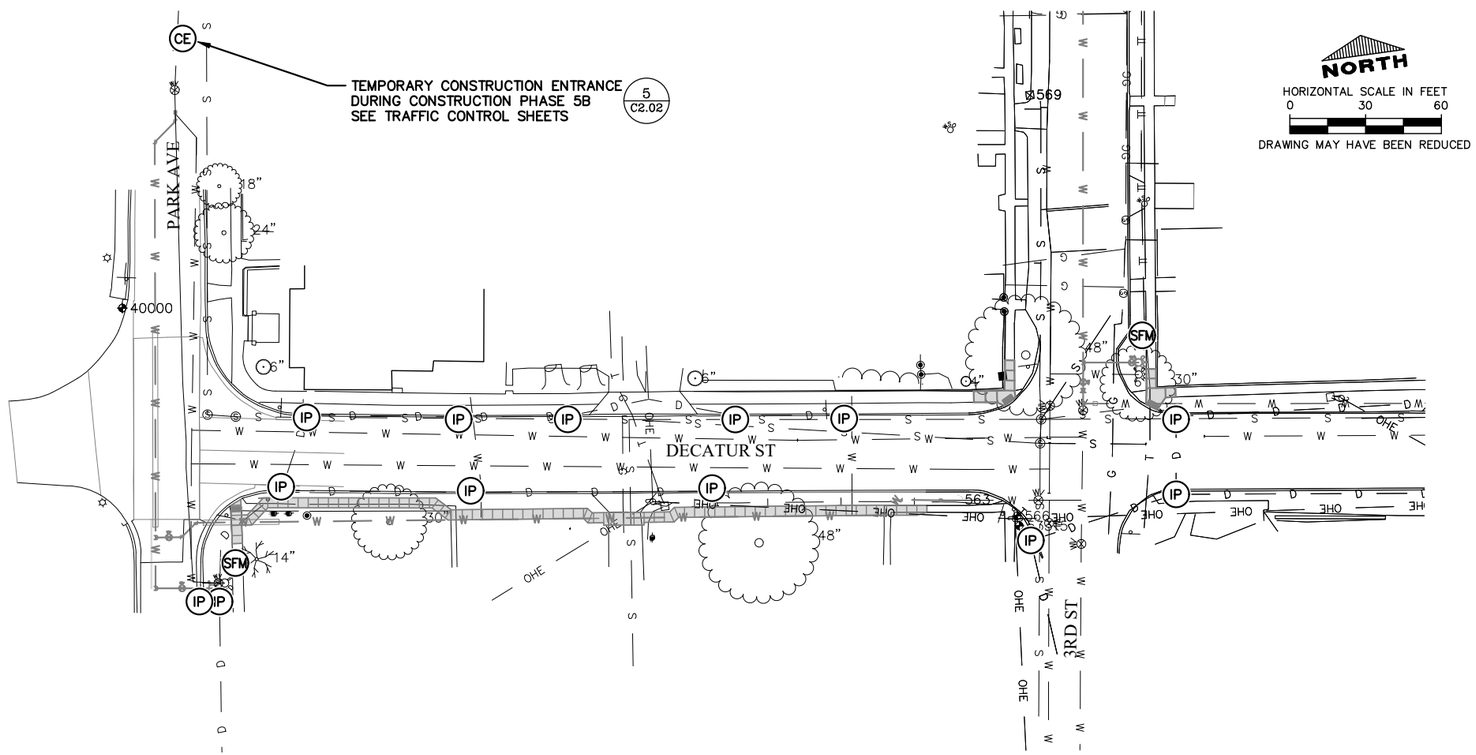

IIW, P.C.

ARCHITECTURE
CIVIL ENGINEERING
CONSTRUCTION SERVICES
ENVIRONMENTAL ENGINEERING
LAND SURVEYING
MUNICIPAL ENGINEERING
STRUCTURAL ENGINEERING
TRANSPORTATION ENGINEERING

INTEGRITY.EXPERTISE.SOLUTIONS

© COPYRIGHT 2019
ALL RIGHTS RESERVED.
THESE DOCUMENTS HAVE BEEN PREPARED SPECIFICALLY FOR THIS PROJECT ONLY. NO PART OF THIS DOCUMENT MAY BE REPRODUCED OR DISTRIBUTED IN ANY FORM WITHOUT THE PERMISSION OF IIW, P.C. ALL INFORMATION IN THIS DOCUMENT IS CONSIDERED PROPERTY OF IIW, P.C.

Project Description

EROSION CONTROL PLAN

CITY OF GALENA
EAST SIDE UTILITY
SYSTEM IMPROVEMENTS

P:\17\054\DRAWINGS\CIVIL\17054 Z2 02-P.DWG 12/13/2019 3:42 PM LYNN NEAL

Drawing Issue Information

Project Mgr: GTB
Drawn By: MPA
Issued For Bidding: 12-16-19 Issued For Construction: .

Rev	Description	Date	By
.	.	.	.
.	.	.	.
.	.	.	.
.	.	.	.
.	.	.	.
.	.	.	.

Sheet No:

C2.12

Project No: 17054

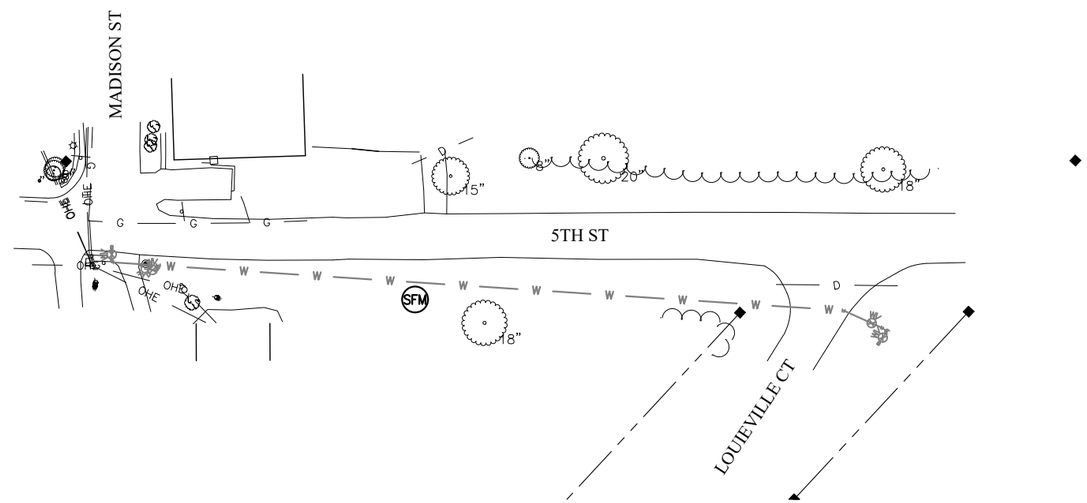

NORTH

HORIZONTAL SCALE IN FEET
0 30 60
DRAWING MAY HAVE BEEN REDUCED

IIW, P.C.

iiw

ARCHITECTURE
CIVIL ENGINEERING
CONSTRUCTION SERVICES
ENVIRONMENTAL ENGINEERING
LAND SURVEYING
MUNICIPAL ENGINEERING
STRUCTURAL ENGINEERING
TRANSPORTATION ENGINEERING

INTEGRITY.EXPERTISE.SOLUTIONS

© COPYRIGHT 2019
ALL RIGHTS RESERVED.
THESE DOCUMENTS HAVE BEEN PREPARED SPECIFICALLY FOR THIS PROJECT ONLY. NO PART OF THIS DOCUMENT MAY BE REPRODUCED OR DISTRIBUTED IN ANY FORM WITHOUT THE PERMISSION OF IIW, P.C. ALL INFORMATION IN THIS DOCUMENT IS CONSIDERED PROPERTY OF IIW, P.C.

Project Description

EROSION CONTROL PLAN

CITY OF GALENA
EAST SIDE UTILITY
SYSTEM IMPROVEMENTS

P:\17\054\DRAWINGS\CIVIL\17054 -Z2 -02 P.DWG 12/13/2019 3:42 PM LYNN NEAL

Drawing Issue Information

Drawn By: MPA
Project Mgr: GTB
Issued For Bidding: 12-16-19 Issued For Construction: .

Rev	Description	Date	By
.	.	.	.
.	.	.	.
.	.	.	.
.	.	.	.
.	.	.	.
.	.	.	.
.	.	.	.

Sheet No:

C2.13

Project No: 17054

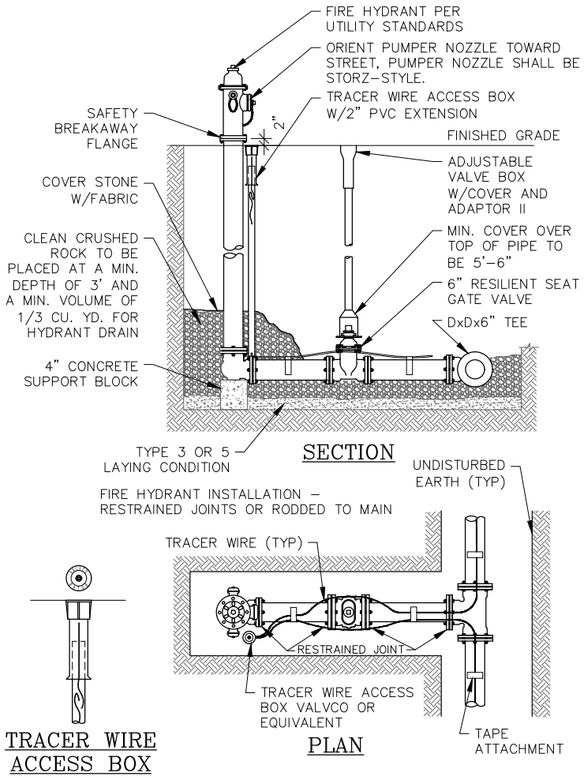

6 C5.01 FIRE HYDRANT DETAIL

NOT TO SCALE

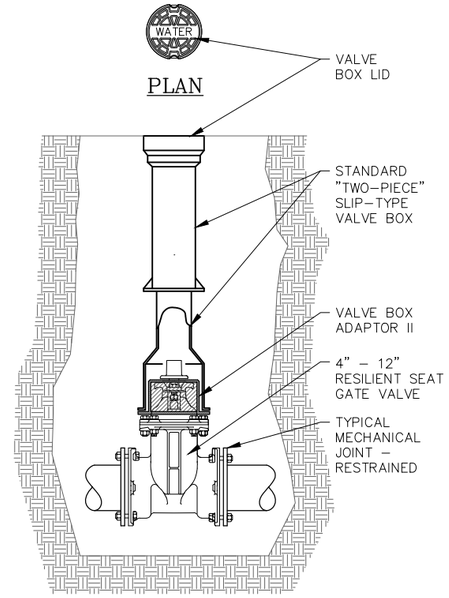

8 C5.01 GATE VALVE WITH BOX

NOT TO SCALE

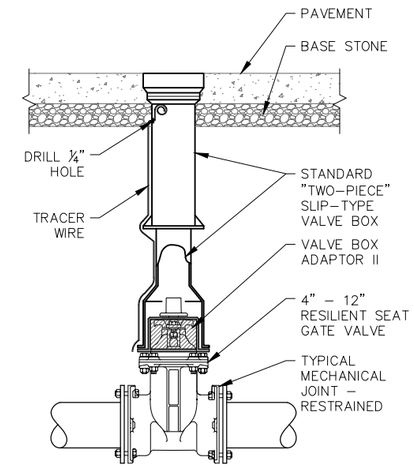

9 C5.01 GATE VALVE IN PAVEMENT

NOT TO SCALE

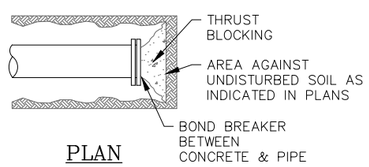

16 C5.01 THRUST BLOCK DETAIL

NOT TO SCALE

IIW, P.C.

ARCHITECTURE
CIVIL ENGINEERING
CONSTRUCTION SERVICES
ENVIRONMENTAL ENGINEERING
LAND SURVEYING
MUNICIPAL ENGINEERING
STRUCTURAL ENGINEERING
TRANSPORTATION ENGINEERING

INTEGRITY.EXPERTISE.SOLUTIONS

© COPYRIGHT 2019
ALL RIGHTS RESERVED.
THESE DOCUMENTS HAVE BEEN PREPARED SPECIFICALLY FOR THIS PROJECT ONLY. NO PART OF THIS DOCUMENT MAY BE REPRODUCED OR DISTRIBUTED IN ANY FORM WITHOUT THE PERMISSION OF IIW, P.C. ALL INFORMATION IN THIS DOCUMENT IS CONSIDERED PROPERTY OF IIW, P.C.

Project Description

WATER DETAILS

CITY OF GALENA
EAST SIDE UTILITY
SYSTEM IMPROVEMENTS

P:\17\054\DRAWINGS\CIVIL\17054_ZZ_C5.DWG 12/13/2019 3:42 PM LYNN NEAL

Drawing Issue Information

Drawn By: MPA
Project Mgr: GTB
Issued For Bidding: 12-16-19 Issued For Construction: .

Rev	Description	Date	By
.	.	.	.
.	.	.	.
.	.	.	.
.	.	.	.
.	.	.	.
.	.	.	.

Sheet No:

C5.01

Project No: 17054

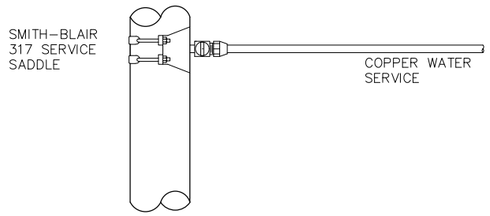

PLAN

PROFILE

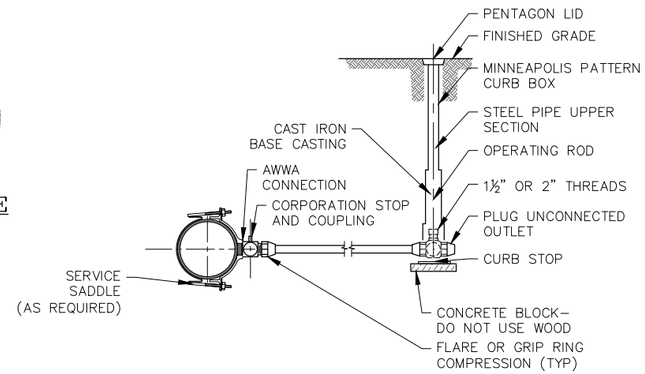

(TYPICAL)
PROFILE

6 C5.02 SERVICE LINE INSTALLATION
NOT TO SCALE

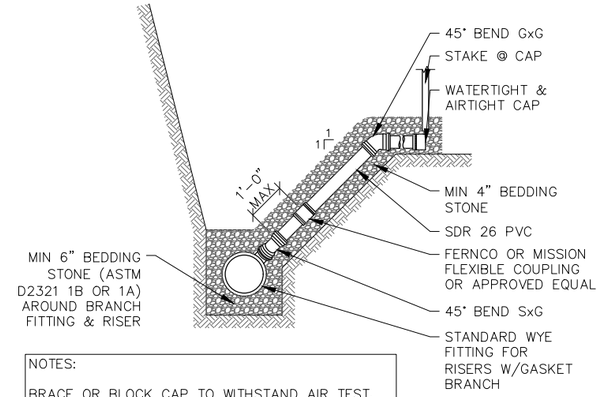

NOTES:

BRACE OR BLOCK CAP TO WITHSTAND AIR TEST.

RISERS TO BE CONSTRUCTED WHERE SEWER DEPTH EXCEEDS 12' OR AS REQUIRED.

SxG IS SPIGOT BY GASKET
GxG IS GASKET BY GASKET

CONSULT ENGINEER FOR DIP RISER

8 C5.02 SERVICE DETAIL WITH OUT TRENCH BOX
NOT TO SCALE

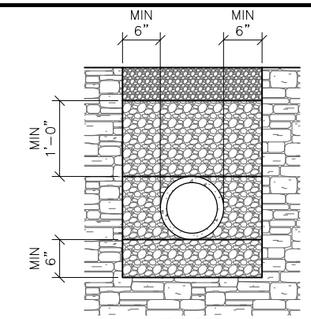

ROCK

WHEN ROCK IS ENCOUNTERED THE TRENCH SHALL BE EXCAVATED A MIN OF 6" ALL AROUND PIPE. COMPACTED STONE EMBEDMENT FROM 6" BELOW PIPE TO 12" ABOVE TOP OF PIPE.

NATURAL SOIL
TAMPED SOIL
FINAL BACKFILL
EMBEDMENT
ROCK

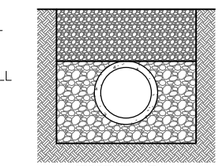

TYPE 5

PIPE BEDDED IN CRUSHED STONE COMPACT TO TOP OF PIPE (90% STANDARD PROCTOR – ASTM D698)

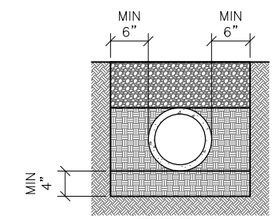

TYPE 3

PIPE BEDDED ON 4" MIN FINELY DIVIDED NATIVE SOIL EXCAVATED FROM TRENCH, FREE OF ROCKS, FOREIGN MATERIALS, AND FROZEN EARTH. INITIAL BACKFILL CONSOLIDATED TO TOP OF PIPE (75% STANDARD PROCTOR – ASTM D698)

15 C5.02 WATER MAIN PIPE BEDDING
NOT TO SCALE

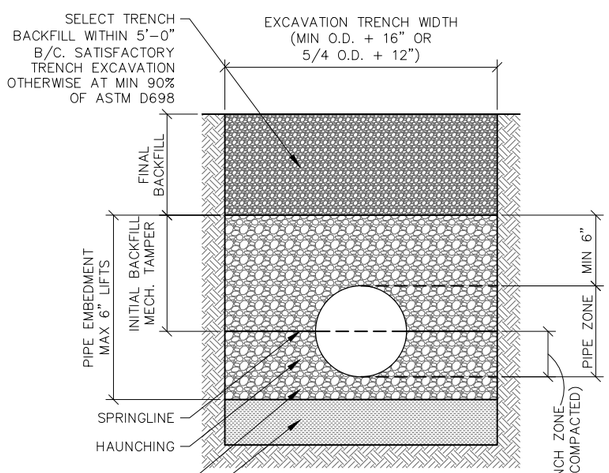

NOTE:
EMBEDMENT MATERIAL:
MAXIMUM PARTICAL SIZE SHALL BE ¾" FOR UP TO 20" DIAMETER AND 10% OF NOMINAL PIPE DIAMETER FOR PIPES LARGER THAN 20".

NATURAL SOIL
TAMPED SOIL
GRANULAR BEDDING
FINAL BACKFILL
EMBEDMENT
ROCK

16 C5.02 PIPE BEDDING TERMINOLOGY
NOT TO SCALE

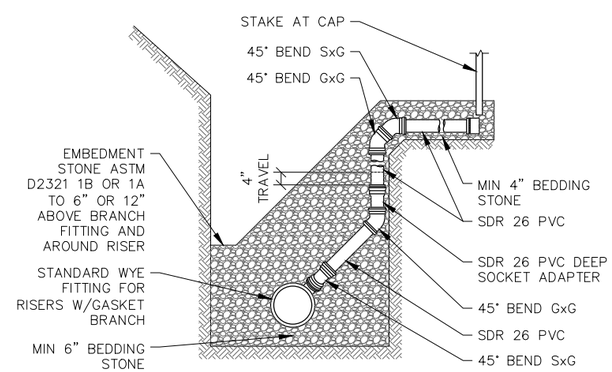

NOTES:

INSTALL VERTICAL SECTION AGAINST UNDISTURBED SOIL.

ENCASE RISER PIPE IN FITTINGS IN CRUSHED STONE

RISERS TO BE CONSTRUCTED WHERE SEWER DEPTH EXCEEDS 12' OR AS REQUIRED

SxG IS SPIGOT BY GASKET
GxG IS GASKET BY GASKET

BRACE OR BLOCK CAP TO WITHSTAND AIR TEST

CONSULT ENGINEER FOR DIP RISER

18 C5.02 SERVICE DETAIL WITH TRENCH BOX
NOT TO SCALE

IIW, P.C.
iiw
ARCHITECTURE
CIVIL ENGINEERING
CONSTRUCTION SERVICES
ENVIRONMENTAL ENGINEERING
LAND SURVEYING
MUNICIPAL ENGINEERING
STRUCTURAL ENGINEERING
TRANSPORTATION ENGINEERING
INTEGRITY.EXPERTISE.SOLUTIONS

© COPYRIGHT 2019
ALL RIGHTS RESERVED.
THESE DOCUMENTS HAVE BEEN PREPARED SPECIFICALLY FOR THIS PROJECT ONLY. NO PART OF THIS DOCUMENT MAY BE REPRODUCED OR DISTRIBUTED IN ANY FORM WITHOUT THE PERMISSION OF IIW, P.C. ALL INFORMATION IN THIS DOCUMENT IS CONSIDERED PROPERTY OF IIW, P.C.

Project Description

WATER DETAILS

CITY OF GALENA
EAST SIDE UTILITY
SYSTEM IMPROVEMENTS

P:\17\054\DRAWINGS\CIVIL\17054 Z2 C5.0.DWG 12/13/2019 3:43 PM LYNN NEAL

Drawing Issue Information

Drawn By: MPA
Project Mgr: GTB
Issued For Bidding: 12-16-19 Issued For Construction: .

Rev	Description	Date	By

Sheet No:
C5.02
Project No: 17054

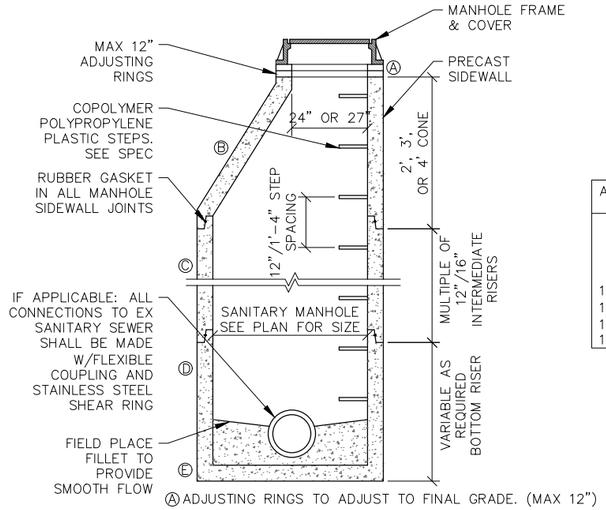

FRAME & COVER TO BE NEENAH R-1642A OR EQUAL. FRAMES WITH BOLT-DOWN LIDS SHALL BE NEENAH R-1916F

AVERAGE GRADE	MINIMUM DROP THROUGH MANHOLE
0.00 – 2.5%	0.10'
2.51 – 5.0%	0.20'
5.01 – 7.5%	0.30'
7.51 – 10.0%	0.40'
10.01 – 12.5%	0.50'
12.51 – 15.0%	0.60'
15.01 – 17.5%	0.70'
17.51 – 20.0%	0.80

Ⓐ ADJUSTING RINGS TO ADJUST TO FINAL GRADE. (MAX 12")

Ⓑ ECCENTRIC MANHOLE CONE SECTION

Ⓒ INTERMEDIATE SECTIONS ARE USED IN MULTIPLES OF 12" OR 16" INCREMENTS AS REQUIRED.

Ⓓ BOTTOM SECTION IS CAST TO A LENGTH REQUIRED TO MAKE THE PROPER MANHOLE HEIGHT AND HAS PIPE CONNECTIONS AS NEEDED.

Ⓔ INTEGRALLY PRECAST BASE SECTION.

NOTE:
MANHOLES ARE MANUFACTURED IN ACCORDANCE WITH ASTM SPECIFICATION C478.

MANHOLES FURNISHED WITH STEPS.

6 / C5.03 INSIDE DROP MANHOLE

NOT TO SCALE

AVERAGE GRADE	MINIMUM DROP THROUGH MANHOLE
0.00 – 2.5%	0.10'
2.51 – 5.0%	0.20'
5.01 – 7.5%	0.30'
7.51 – 10.0%	0.40'
10.01 – 12.5%	0.50'
12.51 – 15.0%	0.60'
15.01 – 17.5%	0.70'
17.51 – 20.0%	0.80

FRAME & COVER TO BE NEENAH R-1642A OR EQUAL. FRAMES WITH BOLT-DOWN LIDS SHALL BE NEENAH R-1916F.

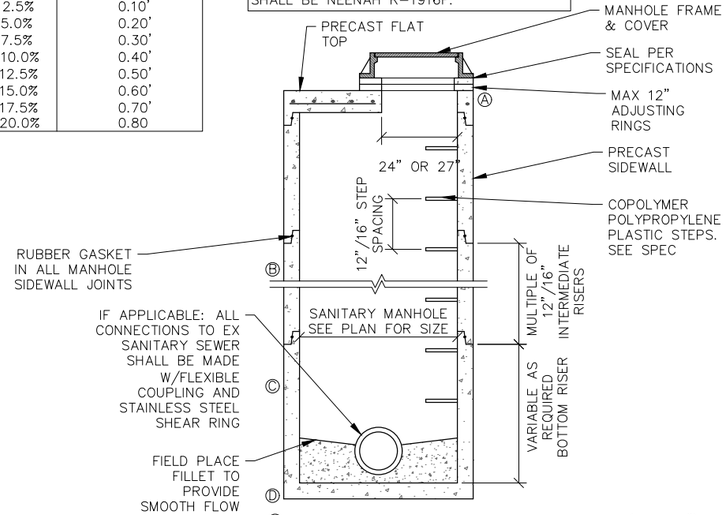

NOTE:
MANHOLES ARE MANUFACTURED IN ACCORDANCE WITH ASTM SPECIFICATION C478.

MANHOLES FURNISHED WITH STEPS.

Ⓐ ADJUSTING RINGS TO ADJUST TO FINAL GRADE (MAX 12")

Ⓑ INTERMEDIATE SECTIONS ARE USED IN COMBINATIONS OF 12" OR 16" INCREMENTS AS REQUIRED.

Ⓒ BOTTOM SECTION IS CAST TO A LENGTH REQUIRED TO MAKE THE PROPER MANHOLE HEIGHT AND HAS CONNECTIONS AS REQUIRED.

Ⓓ INTEGRALLY PRECAST BASE SECTION

16 / C5.03 FLAT TOP MANHOLE

NOT TO SCALE

AVERAGE GRADE	MINIMUM DROP THROUGH MANHOLE
0.00 – 2.5%	0.10'
2.51 – 5.0%	0.20'
5.01 – 7.5%	0.30'
7.51 – 10.0%	0.40'
10.01 – 12.5%	0.50'
12.51 – 15.0%	0.60'
15.01 – 17.5%	0.70'
17.51 – 20.0%	0.80

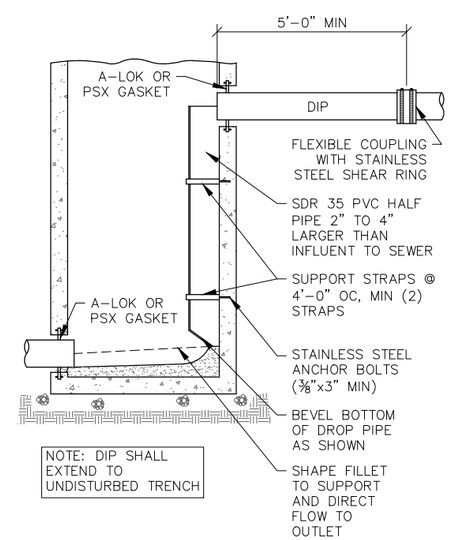

NOTE: DIP SHALL EXTEND TO UNDISTURBED TRENCH

18 / C5.03 SANITARY MANHOLE – CAST IN FRAME

NOT TO SCALE

IIW, P.C.
iiw
ARCHITECTURE
CIVIL ENGINEERING
CONSTRUCTION SERVICES
ENVIRONMENTAL ENGINEERING
LAND SURVEYING
MUNICIPAL ENGINEERING
STRUCTURAL ENGINEERING
TRANSPORTATION ENGINEERING
INTEGRITY.EXPERTISE.SOLUTIONS

© COPYRIGHT 2019
ALL RIGHTS RESERVED.
THESE DOCUMENTS HAVE BEEN PREPARED SPECIFICALLY FOR THIS PROJECT ONLY. NO PART OF THIS DOCUMENT MAY BE REPRODUCED OR DISTRIBUTED IN ANY FORM WITHOUT THE PERMISSION OF IIW, P.C. ALL INFORMATION IN THIS DOCUMENT IS CONSIDERED PROPERTY OF IIW, P.C.

Project Description

SANITARY DETAILS

CITY OF GALENA
EAST SIDE UTILITY
SYSTEM IMPROVEMENTS

P:\17\054\DRAWINGS\CIVIL\17054 Z2 C5.0.DWG 12/13/2019 3:43 PM LYNN NEAL

Drawing Issue Information

Project Mgr: GTB
Drawn By: MPA
Issued For Bidding: 12-16-19 Issued For Construction: .

Rev	Description	Date	By
.	.	.	.
.	.	.	.
.	.	.	.
.	.	.	.
.	.	.	.
.	.	.	.

Sheet No:

C5.03

Project No: 17054

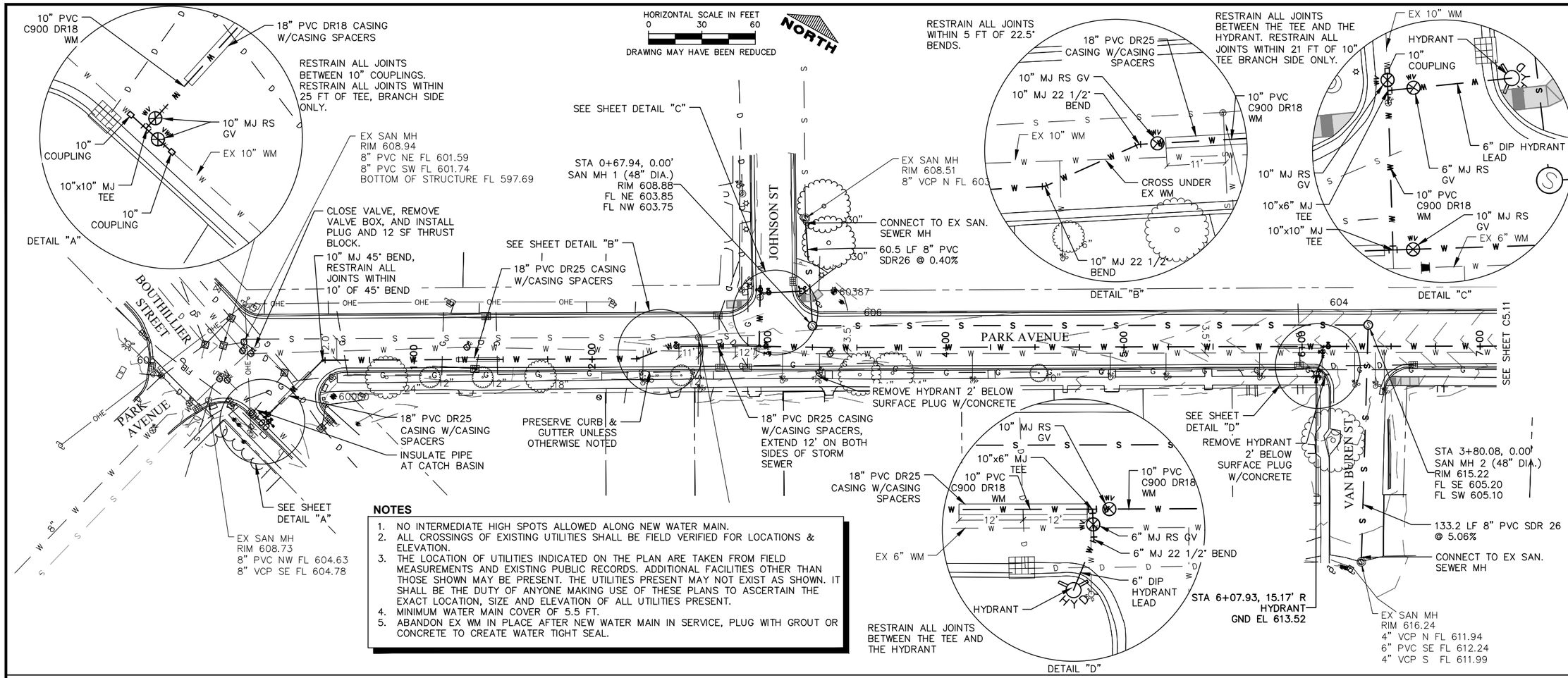

NOTES

1. NO INTERMEDIATE HIGH SPOTS ALLOWED ALONG NEW WATER MAIN.
2. ALL CROSSINGS OF EXISTING UTILITIES SHALL BE FIELD VERIFIED FOR LOCATIONS & ELEVATION.
3. THE LOCATION OF UTILITIES INDICATED ON THE PLAN ARE TAKEN FROM FIELD MEASUREMENTS AND EXISTING PUBLIC RECORDS. ADDITIONAL FACILITIES OTHER THAN THOSE SHOWN MAY BE PRESENT. THE UTILITIES PRESENT MAY NOT EXIST AS SHOWN. IT SHALL BE THE DUTY OF ANYONE MAKING USE OF THESE PLANS TO ASCERTAIN THE EXACT LOCATION, SIZE AND ELEVATION OF ALL UTILITIES PRESENT.
4. MINIMUM WATER MAIN COVER OF 5.5 FT.
5. ABANDON EX WM IN PLACE AFTER NEW WATER MAIN IN SERVICE, PLUG WITH GROUT OR CONCRETE TO CREATE WATER TIGHT SEAL.

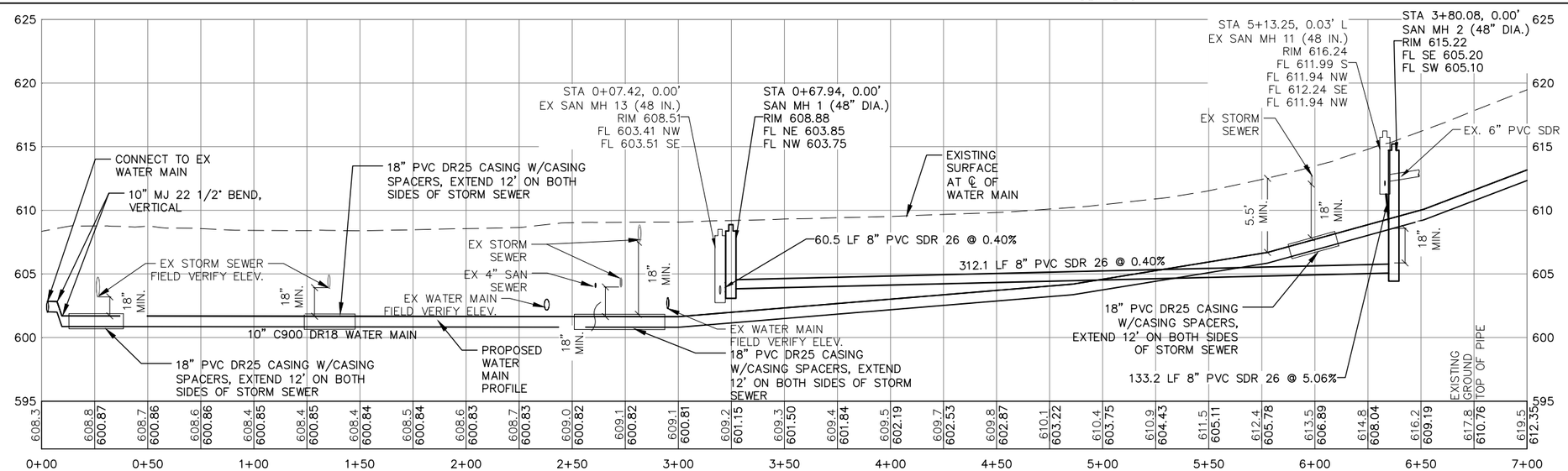

IIW, P.C.

ARCHITECTURE
CIVIL ENGINEERING
CONSTRUCTION SERVICES
ENVIRONMENTAL ENGINEERING
LAND SURVEYING
MUNICIPAL ENGINEERING
STRUCTURAL ENGINEERING
TRANSPORTATION ENGINEERING
INTEGRITY.EXPERTISE.SOLUTIONS

© COPYRIGHT 2019
ALL RIGHTS RESERVED.
THESE DOCUMENTS HAVE BEEN PREPARED SPECIFICALLY FOR THIS PROJECT ONLY. NO PART OF THIS DOCUMENT MAY BE REPRODUCED OR DISTRIBUTED IN ANY FORM WITHOUT THE PERMISSION OF IIW, P.C. ALL INFORMATION IN THIS DOCUMENT IS CONSIDERED PROPERTY OF IIW, P.C.

Project Description

WATER MAIN & SANITARY SEWER
PLAN & PROFILE
CITY OF GALENA
EAST SIDE UTILITY
SYSTEM IMPROVEMENTS

P:\17\054\DRAWINGS\CIVIL\17054 ZZ C5 P.DWG 12/13/2019 3:44 PM LYNN NEAL

Drawing Issue Information
Drawn By: MPA
Project Mgr: GTB
Issued For Bidding: 12-16-19 Issued For Construction:

Rev	Description	Date	By

Sheet No:
C5.10
Project No: 17054

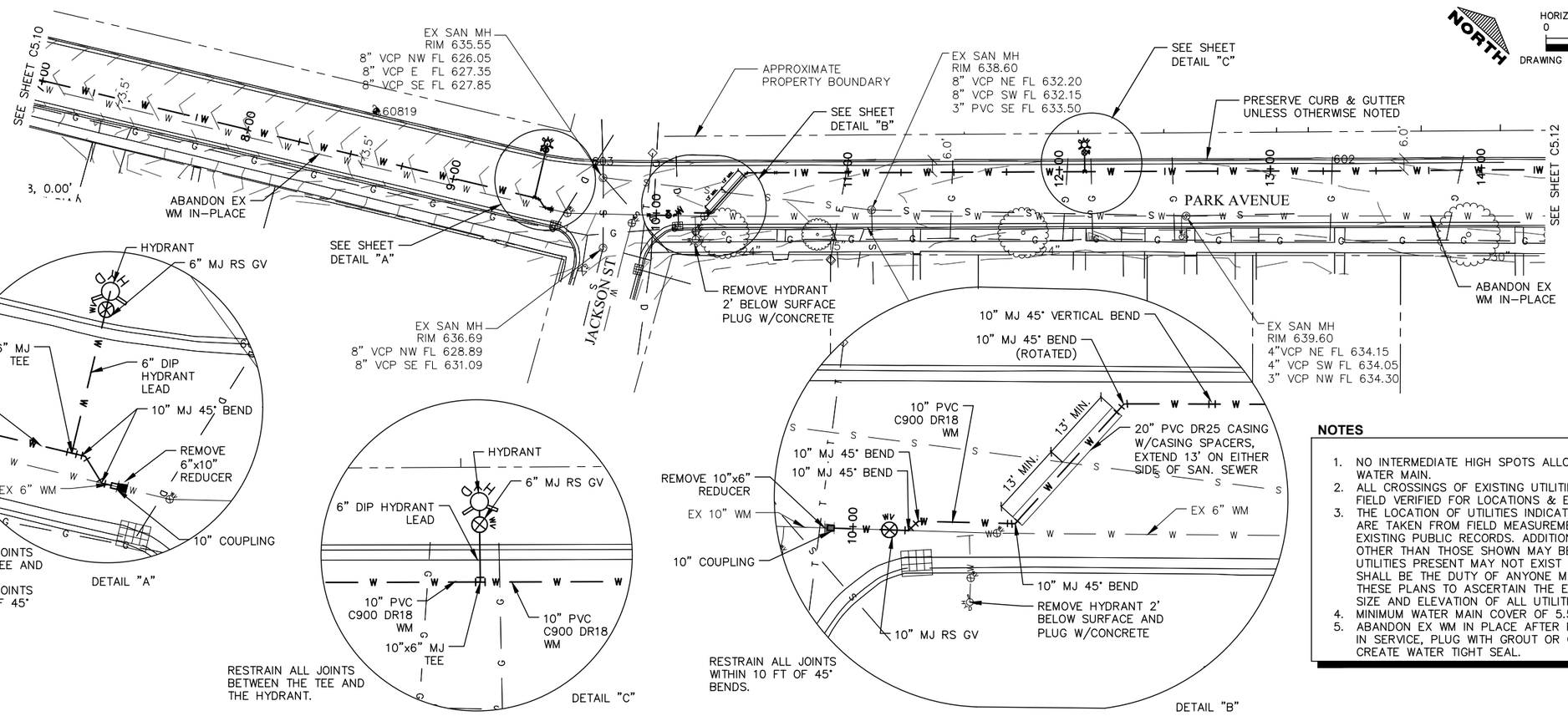

NOTES

1. NO INTERMEDIATE HIGH SPOTS ALLOWED ALONG NEW WATER MAIN.
2. ALL CROSSINGS OF EXISTING UTILITIES SHALL BE FIELD VERIFIED FOR LOCATIONS & ELEVATION.
3. THE LOCATION OF UTILITIES INDICATED ON THE PLAN ARE TAKEN FROM FIELD MEASUREMENTS AND EXISTING PUBLIC RECORDS. ADDITIONAL FACILITIES OTHER THAN THOSE SHOWN MAY BE PRESENT. THE UTILITIES PRESENT MAY NOT EXIST AS SHOWN. IT SHALL BE THE DUTY OF ANYONE MAKING USE OF THESE PLANS TO ASCERTAIN THE EXACT LOCATION, SIZE AND ELEVATION OF ALL UTILITIES PRESENT.
4. MINIMUM WATER MAIN COVER OF 5.5 FT.
5. ABANDON EX WM IN PLACE AFTER NEW WATER MAIN IN SERVICE, PLUG WITH GROUT OR CONCRETE TO CREATE WATER TIGHT SEAL.

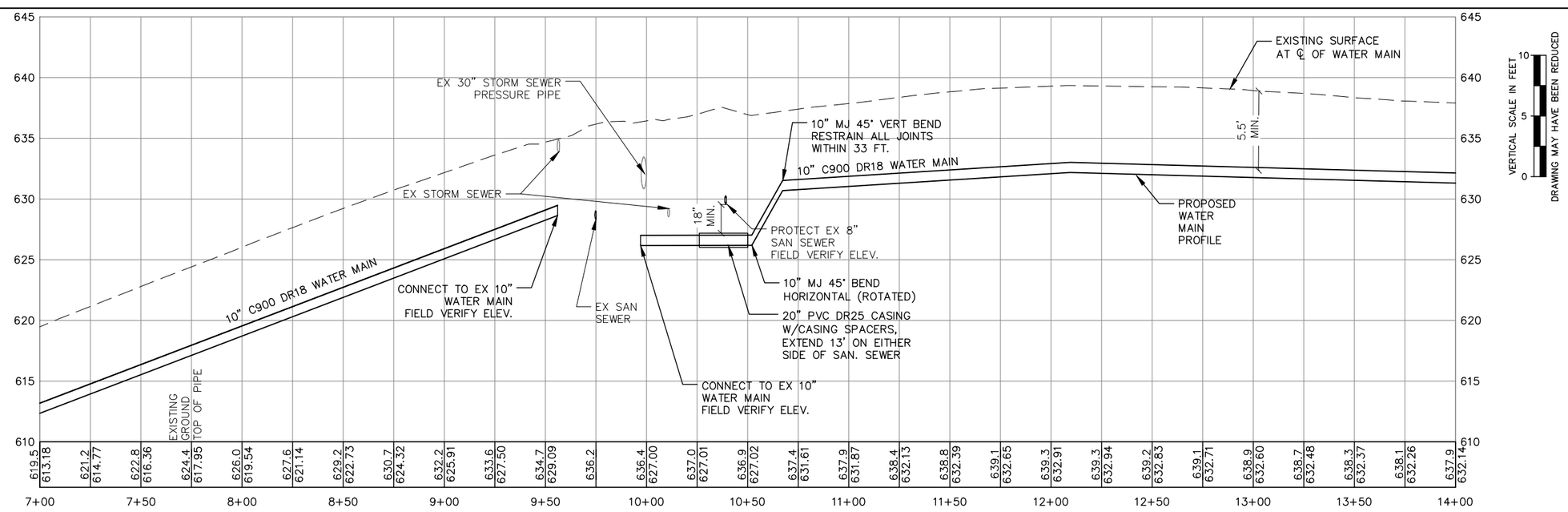

IIW, P.C.
iiw
ARCHITECTURE
CIVIL ENGINEERING
CONSTRUCTION SERVICES
ENVIRONMENTAL ENGINEERING
LAND SURVEYING
MUNICIPAL ENGINEERING
STRUCTURAL ENGINEERING
TRANSPORTATION ENGINEERING
INTEGRITY.EXPERTISE.SOLUTIONS

© COPYRIGHT 2019
ALL RIGHTS RESERVED.
THESE DOCUMENTS HAVE BEEN PREPARED SPECIFICALLY FOR THIS PROJECT ONLY. NO PART OF THIS DOCUMENT MAY BE REPRODUCED OR DISTRIBUTED IN ANY FORM WITHOUT THE PERMISSION OF IIW, P.C. ALL INFORMATION IN THIS DOCUMENT IS CONSIDERED PROPERTY OF IIW, P.C.

Project Description

WATER MAIN & SANITARY SEWER
PLAN & PROFILE
CITY OF GALENA
EAST SIDE UTILITY
SYSTEM IMPROVEMENTS

P:\17\054\DRAWINGS\CIVIL\17054_ZZ_05 P.DWG 12/13/2019 3:44 PM LYNN NEAL

Drawing Issue Information

Drawn By: MPA
Project Mgr: GTB
Issued For Bidding: 12-16-19 Issued For Construction: .

Rev	Description	Date	By
.	.	.	.
.	.	.	.
.	.	.	.
.	.	.	.
.	.	.	.
.	.	.	.

Sheet No:
C5.11
Project No: 17054

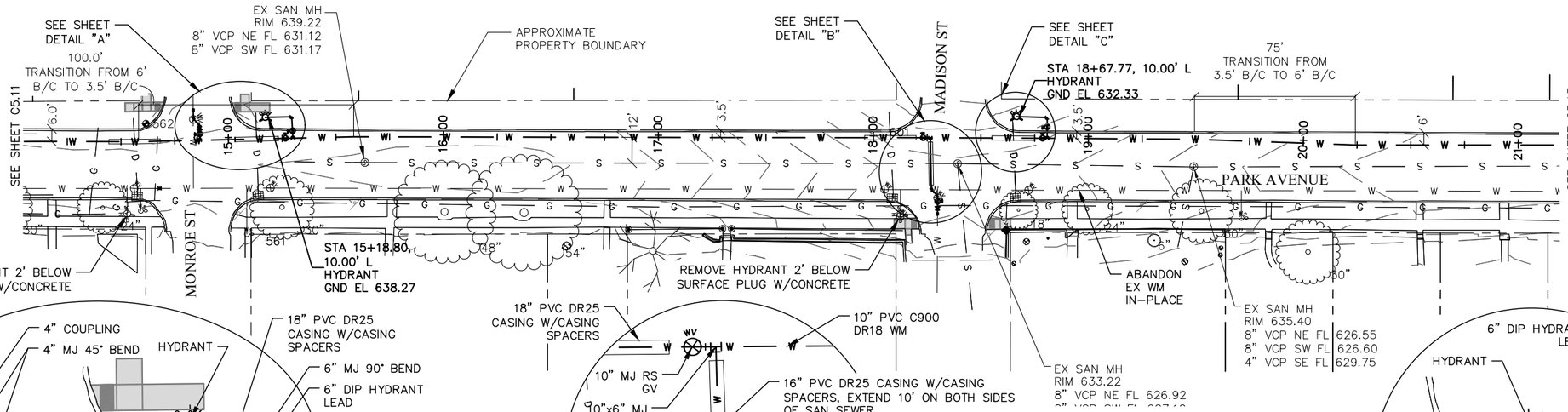

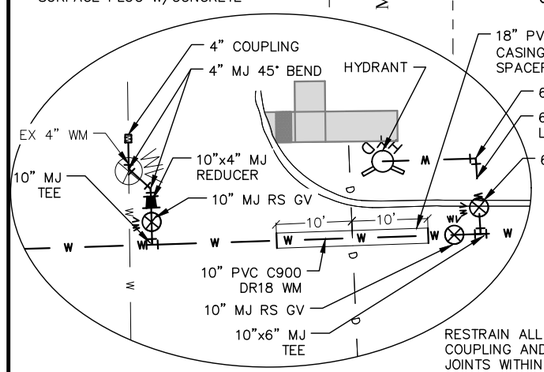

DETAIL "A"

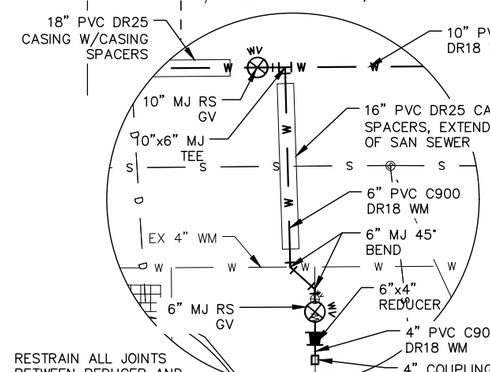

DETAIL "B"

1. NO INTERMEDIATE HIGH SPOTS ALLOWED ALONG NEW WATER MAIN.
2. ALL CROSSINGS OF EXISTING UTILITIES SHALL BE FIELD VERIFIED FOR LOCATIONS & ELEVATION.
3. THE LOCATION OF UTILITIES INDICATED ON THE PLAN ARE TAKEN FROM FIELD MEASUREMENTS AND EXISTING PUBLIC RECORDS. ADDITIONAL FACILITIES OTHER THAN THOSE SHOWN MAY BE PRESENT. THE UTILITIES PRESENT MAY NOT EXIST AS SHOWN. IT SHALL BE THE DUTY OF ANYONE MAKING USE OF THESE PLANS TO ASCERTAIN THE EXACT LOCATION, SIZE AND ELEVATION OF ALL UTILITIES PRESENT.
4. MINIMUM WATER MAIN COVER OF 5.5 FT.
5. ABANDON EX WM IN PLACE AFTER NEW WATER MAIN IN SERVICE, PLUG WITH GROUT OR CONCRETE TO CREATE WATER TIGHT SEAL.

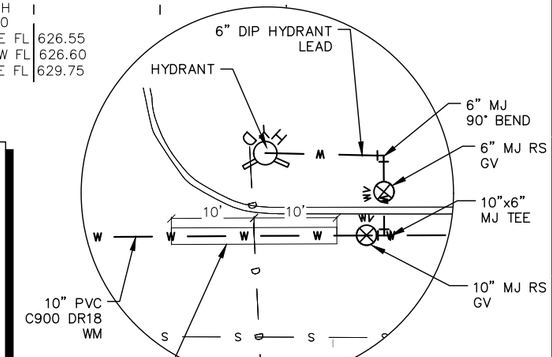

DETAIL "C"

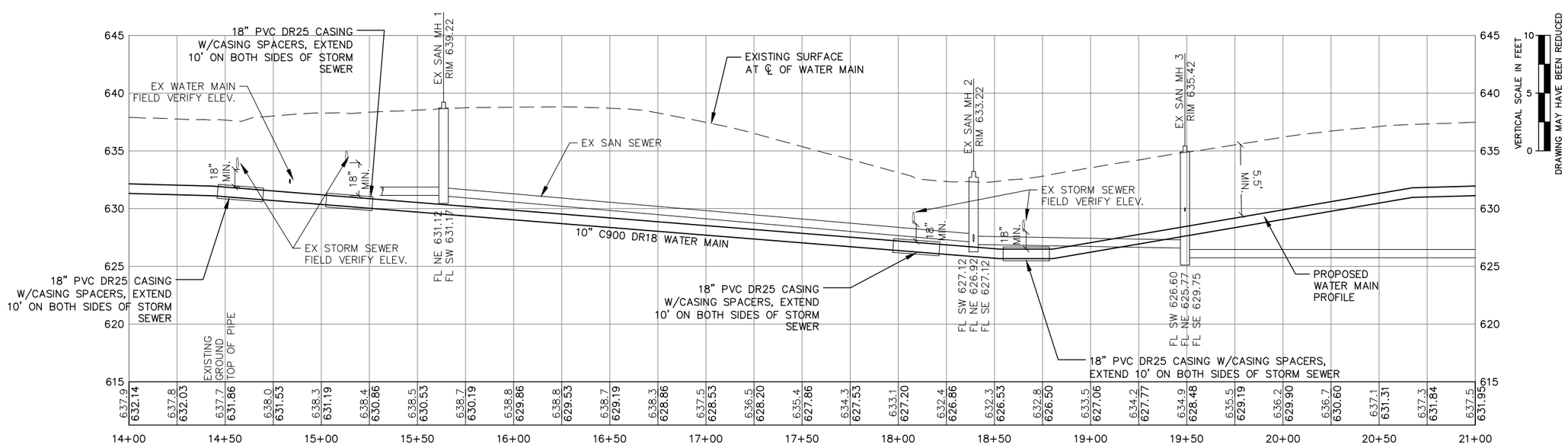

IIW, P.C.

COUPLING

ARCHITECTURE
CIVIL ENGINEERING
CONSTRUCTION SERVICES
ENVIRONMENTAL ENGINEERING
LAND SURVEYING
MUNICIPAL ENGINEERING
STRUCTURAL ENGINEERING
TRANSPORTATION ENGINEERING

INTEGRITY.EXPERTISE.SOLUTIONS

© COPYRIGHT 2019
ALL RIGHTS RESERVED.
THESE DOCUMENTS HAVE BEEN PREPARED SPECIFICALLY FOR THIS PROJECT ONLY. NO PART OF THIS DOCUMENT MAY BE REPRODUCED OR DISTRIBUTED IN ANY FORM WITHOUT THE PERMISSION OF IIW, P.C. ALL INFORMATION IN THIS DOCUMENT IS CONSIDERED PROPERTY OF IIW, P.C.

Project Description

WATER MAIN & SANITARY SEWER PLAN & PROFILE

CITY OF GALENA
EAST SIDE UTILITY
SYSTEM IMPROVEMENTS

P:\17\054\DRAWINGS\CIVIL\17054_ZZ_05_P.DWG 12/13/2019 3:45 PM LYNN NEAL

Drawing Issue Information

Drawn By: MPA
Project Mgr: GTB
Issued For Bidding: 12-16-19 Issued For Construction: .

Rev	Description	Date	By
.	.	.	.
.	.	.	.
.	.	.	.
.	.	.	.
.	.	.	.
.	.	.	.

Sheet No.:

C5.12

Project No: 17054

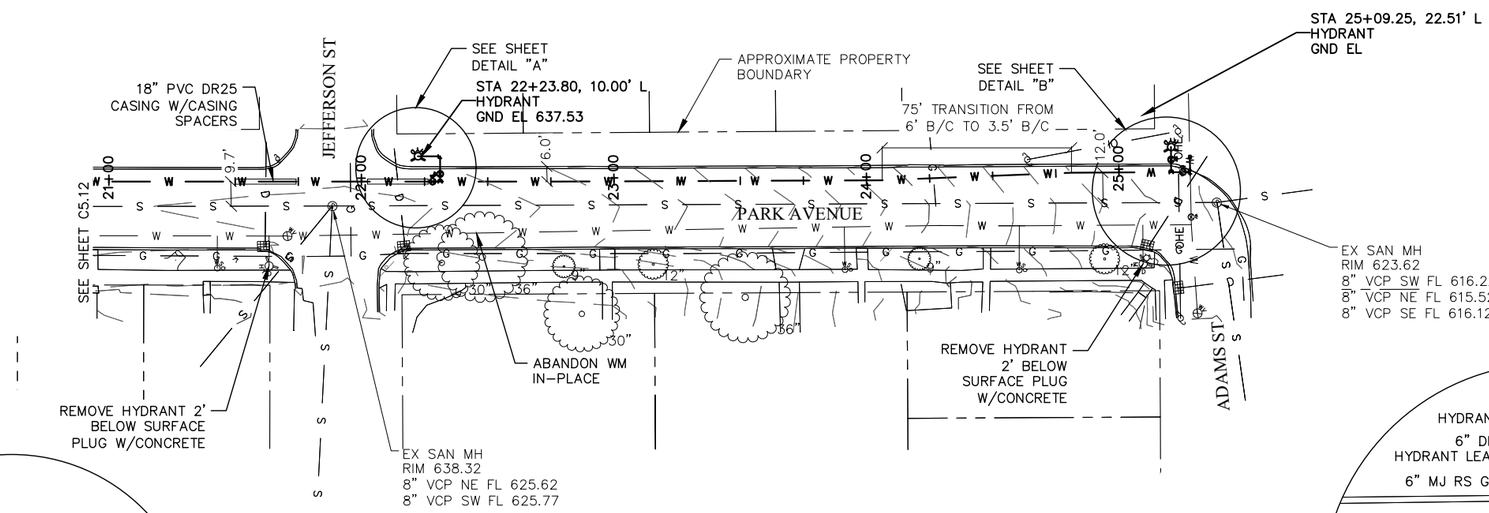

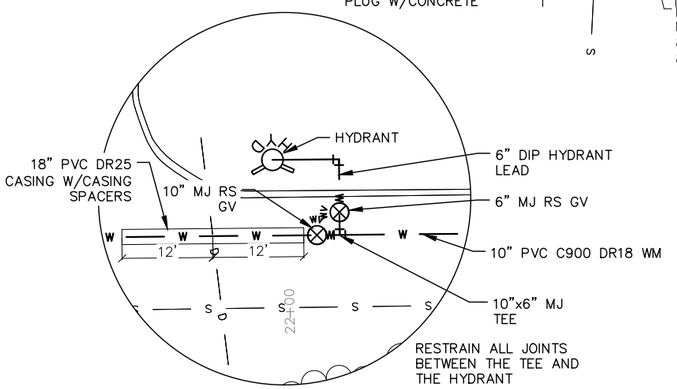

DETAIL "A"

NOTES

1. NO INTERMEDIATE HIGH SPOTS ALLOWED ALONG NEW WATER MAIN.
2. ALL CROSSINGS OF EXISTING UTILITIES SHALL BE FIELD VERIFIED FOR LOCATIONS & ELEVATION.
3. THE LOCATION OF UTILITIES INDICATED ON THE PLAN ARE TAKEN FROM FIELD MEASUREMENTS AND EXISTING PUBLIC RECORDS. ADDITIONAL FACILITIES OTHER THAN THOSE SHOWN MAY BE PRESENT. THE UTILITIES PRESENT MAY NOT EXIST AS SHOWN. IT SHALL BE THE DUTY OF ANYONE MAKING USE OF THESE PLANS TO ASCERTAIN THE EXACT LOCATION, SIZE AND ELEVATION OF ALL UTILITIES PRESENT.
4. MINIMUM WATER MAIN COVER OF 5.5 FT.
5. ABANDON EX WM IN PLACE AFTER NEW WATER MAIN IN SERVICE, PLUG WITH GROUT OR CONCRETE TO CREATE WATER TIGHT SEAL.

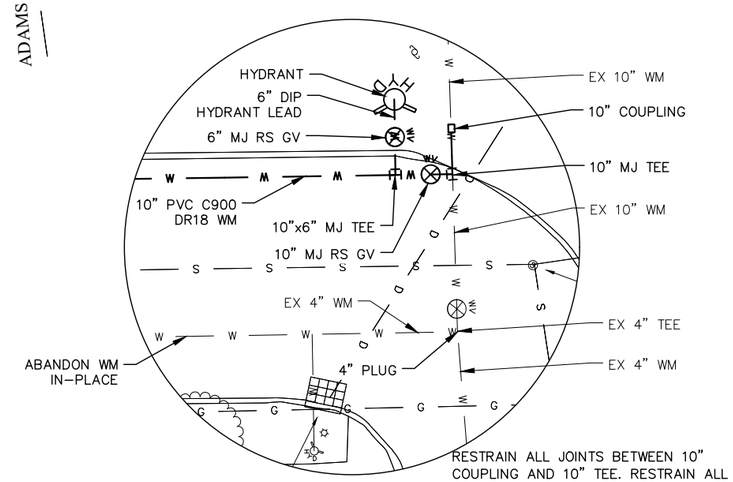

DETAIL "B"

RESTRAIN ALL JOINTS BETWEEN 10" COUPLING AND 10" TEE. RESTRAIN ALL JOINTS ALONG 10" TEE RUN. RESTRAIN ALL JOINTS WITHIN 71 FT OF 10" TEE, BRANCH SIDE. RESTRAIN ALL JOINTS BETWEEN TEE AND HYDRANT.

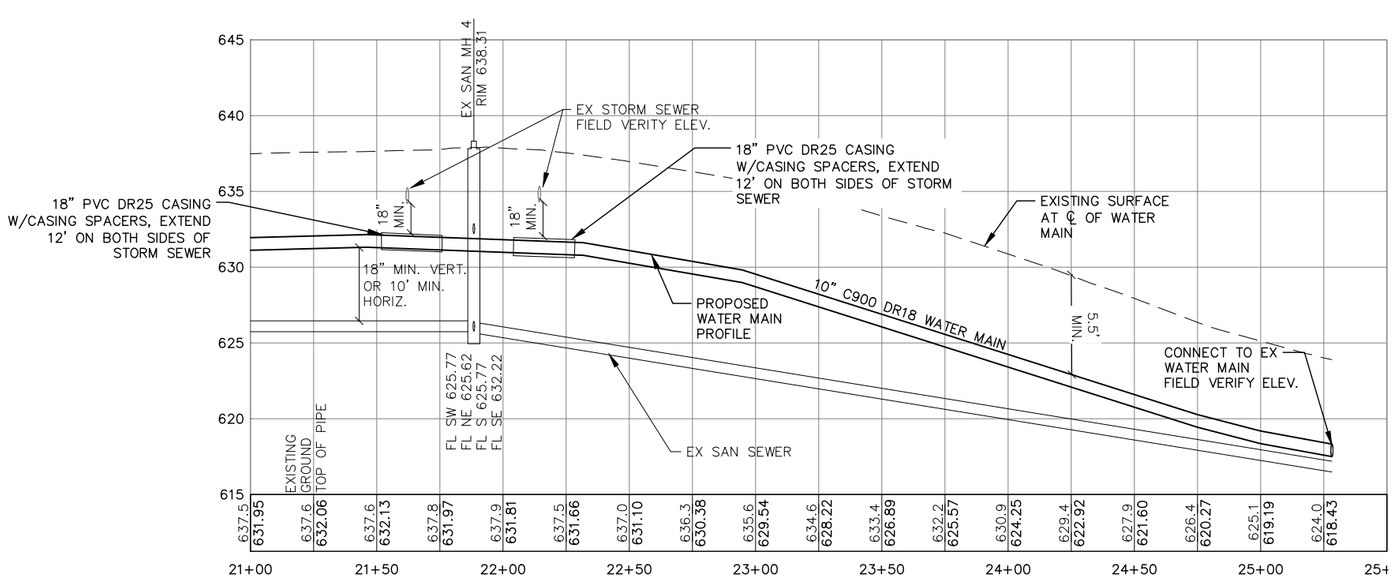

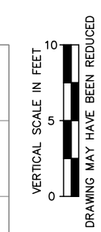

IIW, P.C.
iiw
ARCHITECTURE
CIVIL ENGINEERING
CONSTRUCTION SERVICES
ENVIRONMENTAL ENGINEERING
LAND SURVEYING
MUNICIPAL ENGINEERING
STRUCTURAL ENGINEERING
TRANSPORTATION ENGINEERING
INTEGRITY.EXPERTISE.SOLUTIONS

© COPYRIGHT 2019
ALL RIGHTS RESERVED.
THESE DOCUMENTS HAVE BEEN PREPARED SPECIFICALLY FOR THIS PROJECT ONLY. NO PART OF THIS DOCUMENT MAY BE REPRODUCED OR DISTRIBUTED IN ANY FORM WITHOUT THE PERMISSION OF IIW, P.C. ALL INFORMATION IN THIS DOCUMENT IS CONSIDERED PROPERTY OF IIW, P.C.

Project Description

WATER MAIN & SANITARY SEWER PLAN & PROFILE

CITY OF GALENA
EAST SIDE UTILITY
SYSTEM IMPROVEMENTS

P:\17\054\DRAWINGS\CIVIL\17054_ZZ_05 P.DWG 12/13/2019 3:45 PM LYNN NEAL

Drawing Issue Information

Drawn By: MPA
Project Mgr: GTB
Issued For Bidding: 12-16-19 Issued For Construction: .

Rev	Description	Date	By
.	.	.	.
.	.	.	.
.	.	.	.
.	.	.	.
.	.	.	.
.	.	.	.

Sheet No:

C5.13

Project No: 17054

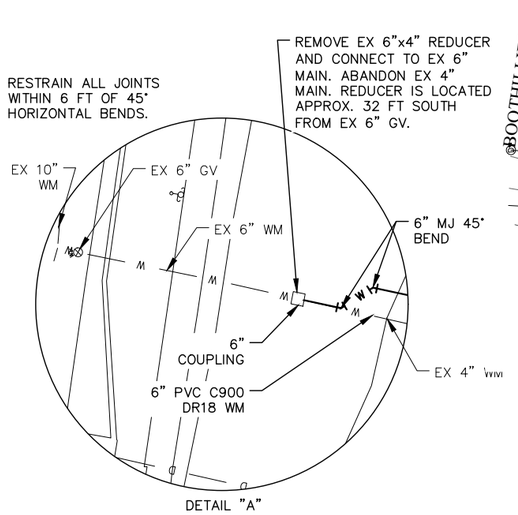

DETAIL "A"

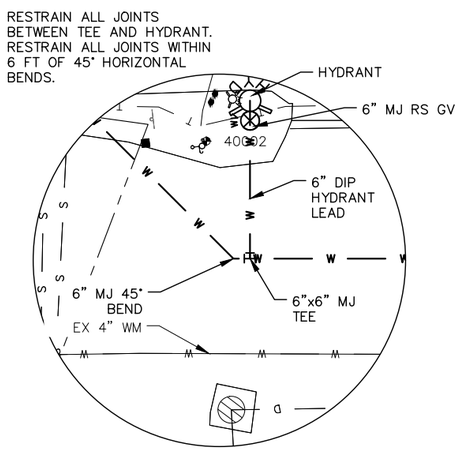

DETAIL "B"

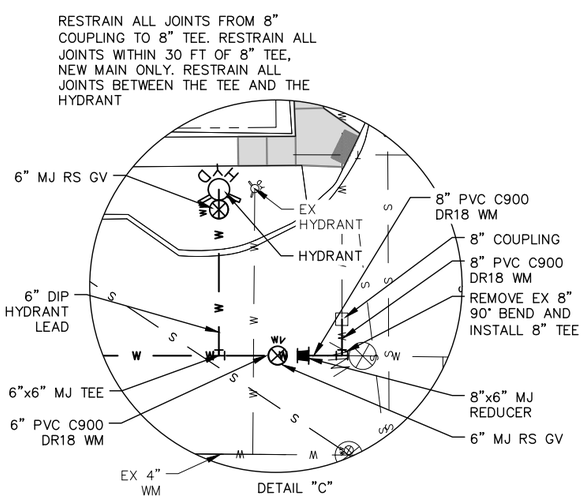

DETAIL "C"

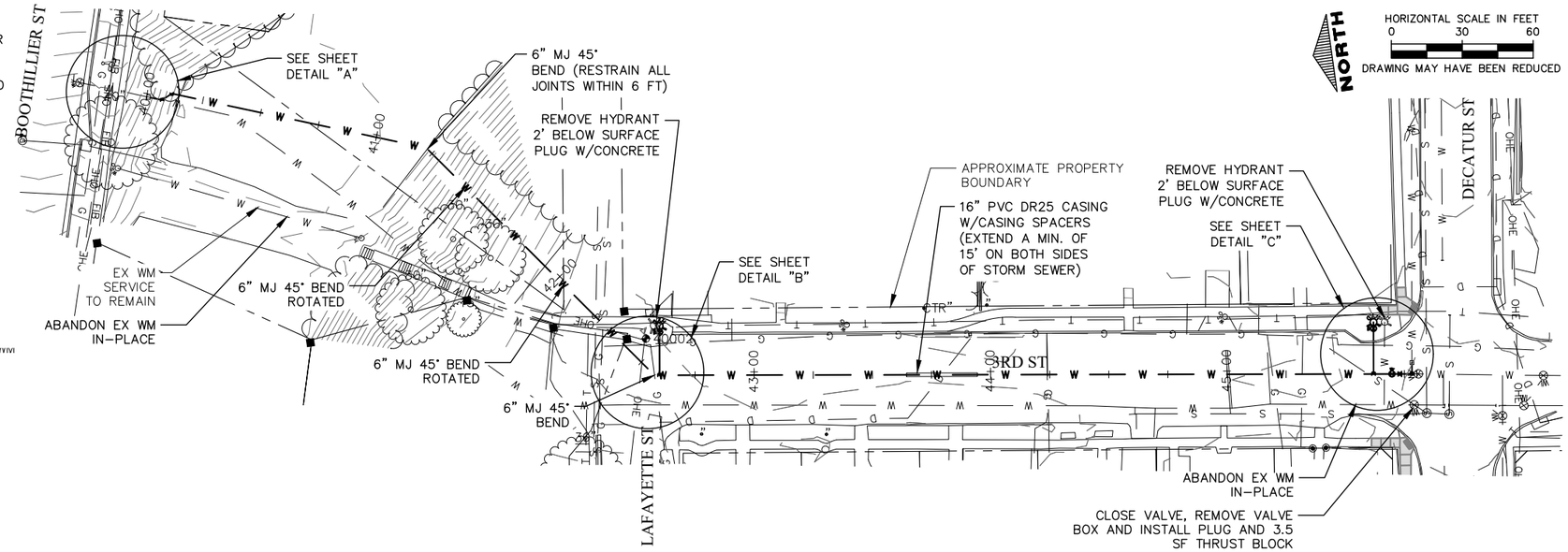

NOTES

1. NO INTERMEDIATE HIGH SPOTS ALLOWED ALONG NEW WATER MAIN.
2. ALL CROSSINGS OF EXISTING UTILITIES SHALL BE FIELD VERIFIED FOR LOCATIONS & ELEVATION.
3. THE LOCATION OF UTILITIES INDICATED ON THE PLAN ARE TAKEN FROM FIELD MEASUREMENTS AND EXISTING PUBLIC RECORDS. ADDITIONAL FACILITIES OTHER THAN THOSE SHOWN MAY BE PRESENT. THE UTILITIES PRESENT MAY NOT EXIST AS SHOWN. IT SHALL BE THE DUTY OF ANYONE MAKING USE OF THESE PLANS TO ASCERTAIN THE EXACT LOCATION, SIZE AND ELEVATION OF ALL UTILITIES PRESENT.
4. MINIMUM WATER MAIN COVER OF 5.5 FT.
5. ABANDON EX WM IN PLACE AFTER NEW WATER MAIN IN SERVICE, PLUG WITH GROUT OR CONCRETE TO CREATE WATER TIGHT SEAL.

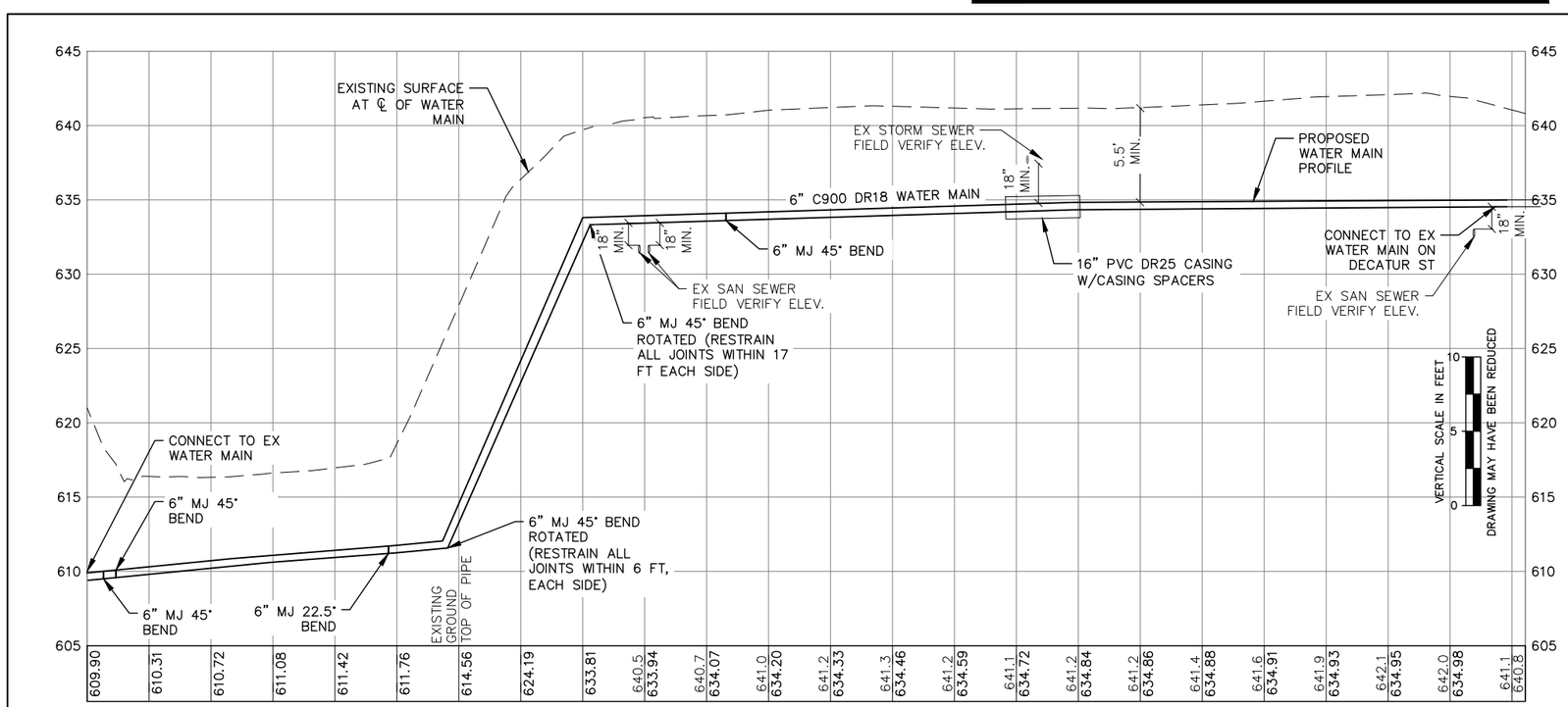

IIW, P.C.
iiw
ARCHITECTURE
CIVIL ENGINEERING
CONSTRUCTION SERVICES
ENVIRONMENTAL ENGINEERING
LAND SURVEYING
MUNICIPAL ENGINEERING
STRUCTURAL ENGINEERING
TRANSPORTATION ENGINEERING
INTEGRITY.EXPERTISE.SOLUTIONS

© COPYRIGHT 2019
ALL RIGHTS RESERVED.
THESE DOCUMENTS HAVE BEEN PREPARED SPECIFICALLY FOR THIS PROJECT ONLY. NO PART OF THIS DOCUMENT MAY BE REPRODUCED OR DISTRIBUTED IN ANY FORM WITHOUT THE PERMISSION OF IIW, P.C. ALL INFORMATION IN THIS DOCUMENT IS CONSIDERED PROPERTY OF IIW, P.C.

Project Description

WATER MAIN & SANITARY SEWER PLAN & PROFILE

CITY OF GALENA
EAST SIDE UTILITY
SYSTEM IMPROVEMENTS

P:\17\054\DRAWINGS\CIVIL\17054 Z7 C5 P-DWG 12/13/2019 3:45 PM LYNN NEAL

Drawing Issue Information

Drawn By: MPA
Project Mgr: GTB
Issued For Bidding: 12-16-19 Issued For Construction: .

Rev	Description	Date	By
.	.	.	.
.	.	.	.
.	.	.	.
.	.	.	.
.	.	.	.
.	.	.	.

Sheet No:

C5.14

Project No: 17054

NOTES

1. NO INTERMEDIATE HIGH SPOTS ALLOWED ALONG NEW WATER MAIN.
2. ALL CROSSINGS OF EXISTING UTILITIES SHALL BE FIELD VERIFIED FOR LOCATIONS & ELEVATION.
3. THE LOCATION OF UTILITIES INDICATED ON THE PLAN ARE TAKEN FROM FIELD MEASUREMENTS AND EXISTING PUBLIC RECORDS. ADDITIONAL FACILITIES OTHER THAN THOSE SHOWN MAY BE PRESENT. THE UTILITIES PRESENT MAY NOT EXIST AS SHOWN. IT SHALL BE THE DUTY OF ANYONE MAKING USE OF THESE PLANS TO ASCERTAIN THE EXACT LOCATION, SIZE AND ELEVATION OF ALL UTILITIES PRESENT.
4. MINIMUM WATER MAIN COVER OF 5.5 FT.
5. ABANDON EX WM IN PLACE AFTER NEW WATER MAIN IN SERVICE, PLUG WITH GROUT OR CONCRETE TO CREATE WATER TIGHT SEAL.

NORTH

HORIZONTAL SCALE IN FEET
0 30 60

DRAWING MAY HAVE BEEN REDUCED

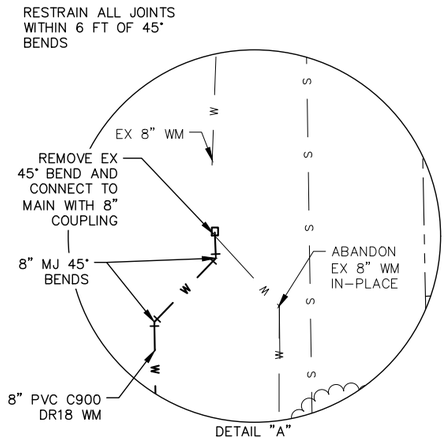

DETAIL "A"

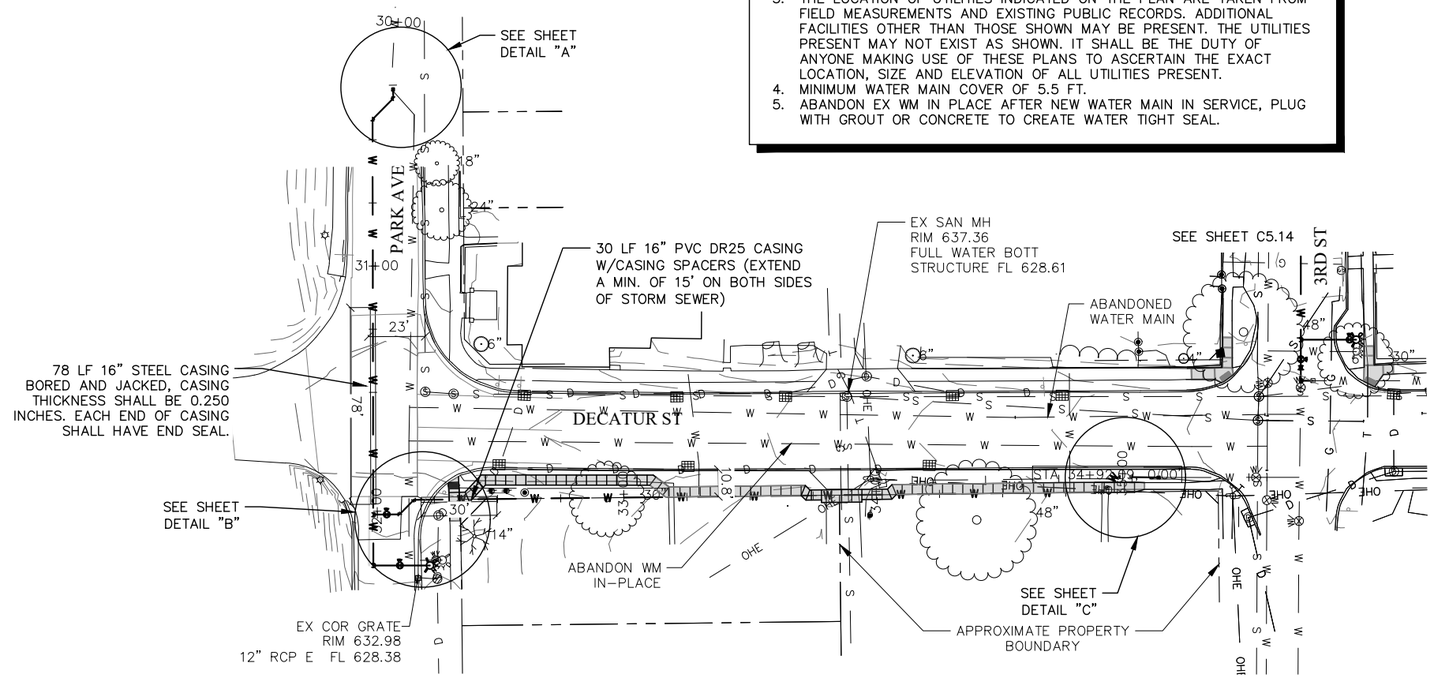

RESTRAIN ALL JOINTS FROM END OF 16" CASING TO 8"x6" TEE. RESTRAIN ALL JOINTS BETWEEN 8"x6" TEE TO HYDRANT. RESTRAIN ALL JOINTS WITHIN 4 FT. OF 8"x8" TEE, BRANCH SIDE. RESTRAIN ALL JOINTS WITHIN 6 FT OF 45° BENDS

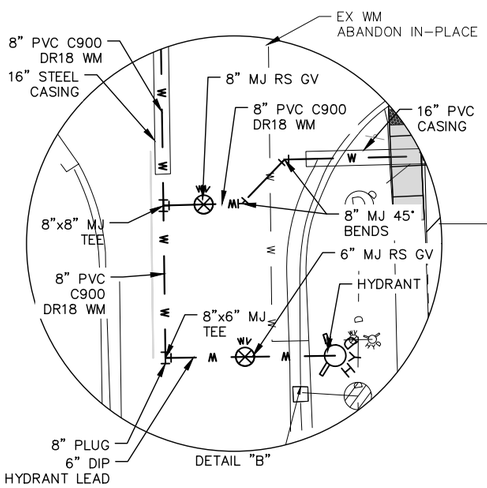

DETAIL "B"

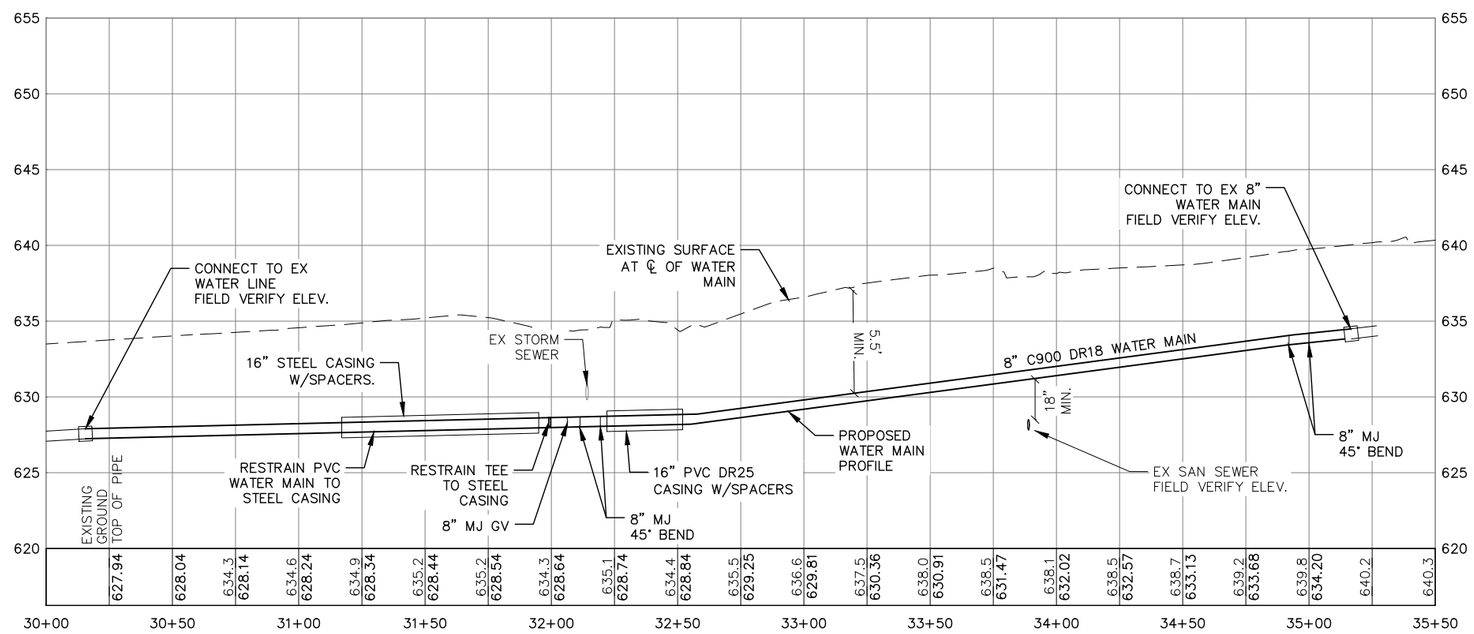

VERTICAL SCALE IN FEET
0 5 10

DRAWING MAY HAVE BEEN REDUCED

RESTRAIN ALL JOINTS WITHIN 6 FT OF 45° BEND, EACH SIDE

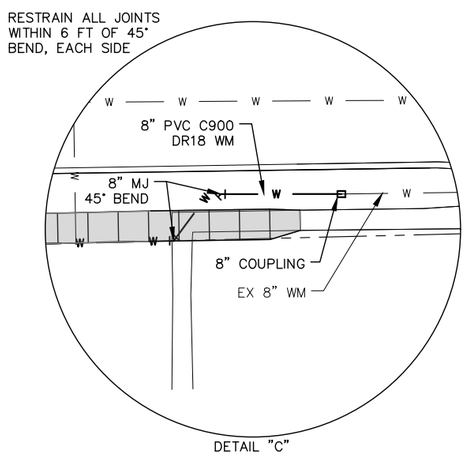

DETAIL "C"

IIW, P.C.
ARCHITECTURE
CIVIL ENGINEERING
CONSTRUCTION SERVICES
ENVIRONMENTAL ENGINEERING
LAND SURVEYING
MUNICIPAL ENGINEERING
STRUCTURAL ENGINEERING
TRANSPORTATION ENGINEERING
INTEGRITY.EXPERTISE.SOLUTIONS

© COPYRIGHT 2019
ALL RIGHTS RESERVED.
THESE DOCUMENTS HAVE BEEN PREPARED SPECIFICALLY FOR THIS PROJECT ONLY. NO PART OF THIS DOCUMENT MAY BE REPRODUCED OR DISTRIBUTED IN ANY FORM WITHOUT THE PERMISSION OF IIW, P.C. ALL INFORMATION IN THIS DOCUMENT IS CONSIDERED PROPERTY OF IIW, P.C.

Project Description

WATER MAIN & SANITARY SEWER
PLAN & PROFILE
CITY OF GALENA
EAST SIDE UTILITY
SYSTEM IMPROVEMENTS

P:\17\054\DRAWINGS\CIVIL\17054 ZZ_05 P.DWG, 12/13/2019 3:46 PM LYNN NEAL

Drawing Issue Information

Drawn By: MPA
Project Mgr: GTB
Issued For Bidding: 12-16-19 Issued For Construction: .

Rev	Description	Date	By
.	.	.	.
.	.	.	.
.	.	.	.
.	.	.	.
.	.	.	.
.	.	.	.

Sheet No:

C5.15

Project No: 17054

NOTES

1. NO INTERMEDIATE HIGH SPOTS ALLOWED ALONG NEW WATER MAIN.
2. ALL CROSSINGS OF EXISTING UTILITIES SHALL BE FIELD VERIFIED FOR LOCATIONS & ELEVATION.
3. THE LOCATION OF UTILITIES INDICATED ON THE PLAN ARE TAKEN FROM FIELD MEASUREMENTS AND EXISTING PUBLIC RECORDS. ADDITIONAL FACILITIES OTHER THAN THOSE SHOWN MAY BE PRESENT. THE UTILITIES PRESENT MAY NOT EXIST AS SHOWN. IT SHALL BE THE DUTY OF ANYONE MAKING USE OF THESE PLANS TO ASCERTAIN THE EXACT LOCATION, SIZE AND ELEVATION OF ALL UTILITIES PRESENT.
4. MINIMUM WATER MAIN COVER OF 5.5 FT.
5. ABANDON EX WM IN PLACE AFTER NEW WATER MAIN IN SERVICE, PLUG WITH GROUT OR CONCRETE TO CREATE WATER TIGHT SEAL.

NORTH

HORIZONTAL SCALE IN FEET
0 30 60
DRAWING MAY HAVE BEEN REDUCED

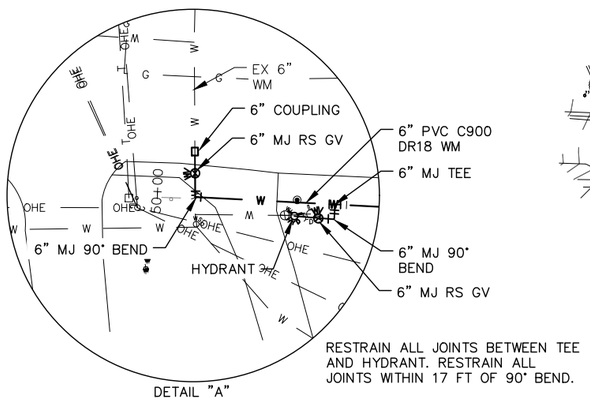

DETAIL "A"

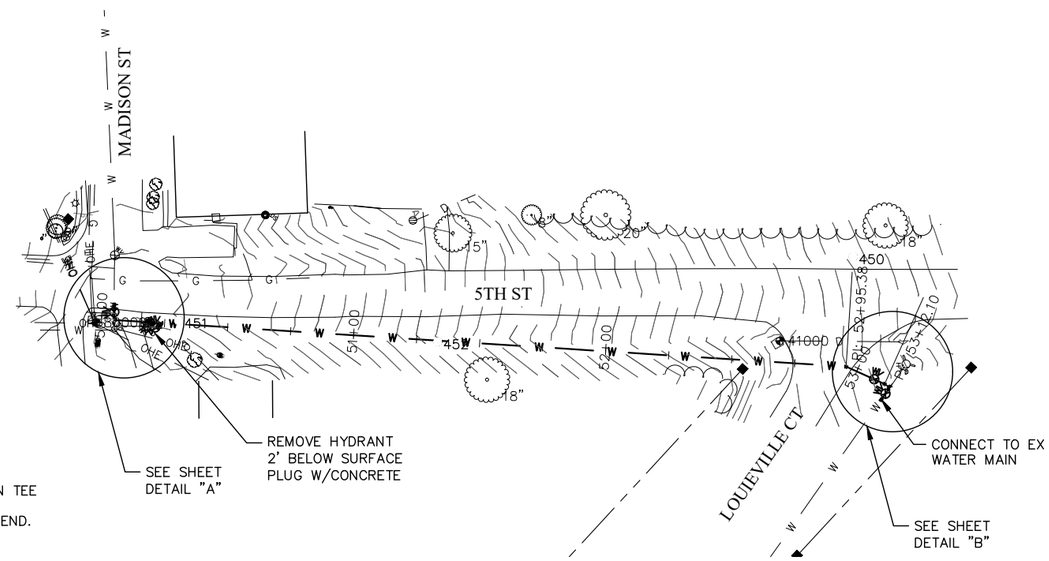

RESTRAIN ALL JOINTS WITHIN 4 FT OF 22.5° BEND. RESTRAIN ALL JOINTS WITHIN 2 FT OF 11.25° BEND. RESTRAIN ALL JOINTS BETWEEN 6" WATER MAIN VALVES AND TEE.

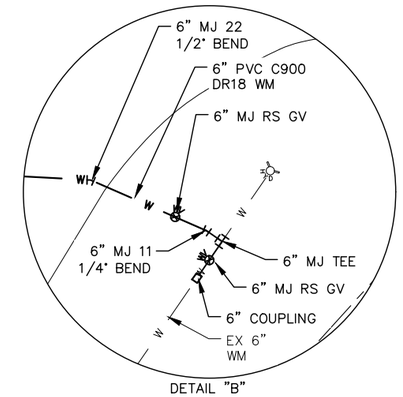

DETAIL "B"

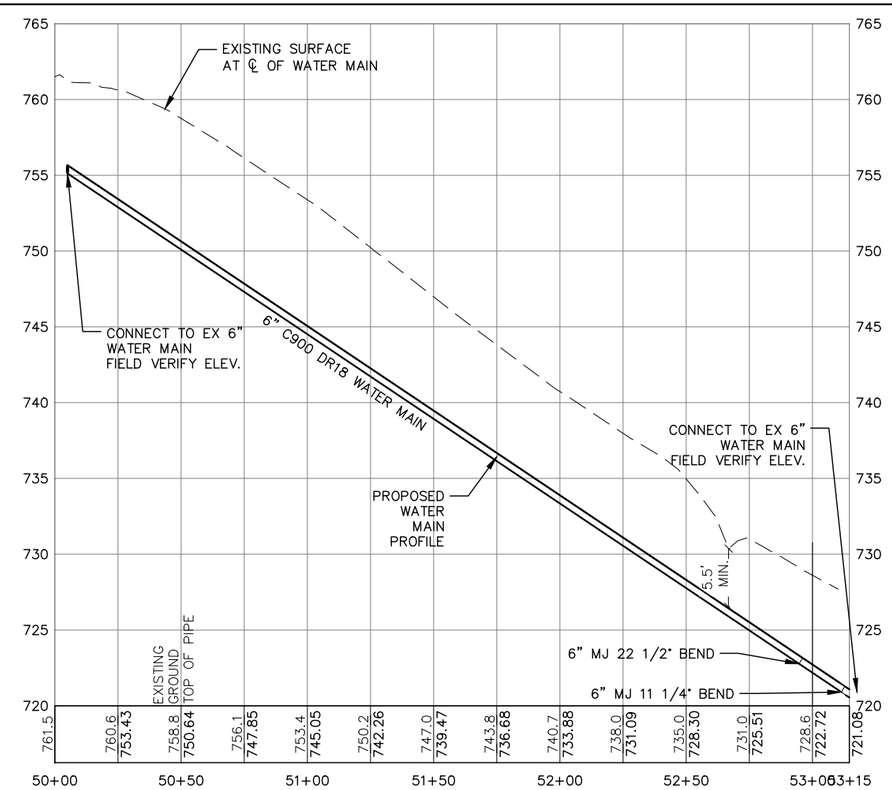

VERTICAL SCALE IN FEET
0 5 10
DRAWING MAY HAVE BEEN REDUCED

IIW, P.C.

iiw

ARCHITECTURE
CIVIL ENGINEERING
CONSTRUCTION SERVICES
ENVIRONMENTAL ENGINEERING
LAND SURVEYING
MUNICIPAL ENGINEERING
STRUCTURAL ENGINEERING
TRANSPORTATION ENGINEERING

INTEGRITY.EXPERTISE.SOLUTIONS

© COPYRIGHT 2019
ALL RIGHTS RESERVED.
THESE DOCUMENTS HAVE BEEN PREPARED SPECIFICALLY FOR THIS PROJECT ONLY. NO PART OF THIS DOCUMENT MAY BE REPRODUCED OR DISTRIBUTED IN ANY FORM WITHOUT THE PERMISSION OF IIW, P.C. ALL INFORMATION IN THIS DOCUMENT IS CONSIDERED PROPERTY OF IIW, P.C.

Project Description

WATER MAIN & SANITARY SEWER PLAN & PROFILE

CITY OF GALENA
EAST SIDE UTILITY
SYSTEM IMPROVEMENTS

P:\17\054\DRAWINGS\CIVIL\17054 Z2 05 P.DWG 12/13/2019 3:46 PM LYNN NEAL

Drawing Issue Information

Drawn By: MPA
Project Mgr: GTB
Issued For Bidding: 12-16-19 Issued For Construction: .

Rev	Description	Date	By
.	.	.	.
.	.	.	.
.	.	.	.
.	.	.	.
.	.	.	.
.	.	.	.

Sheet No:

C5.16

Project No: 17054

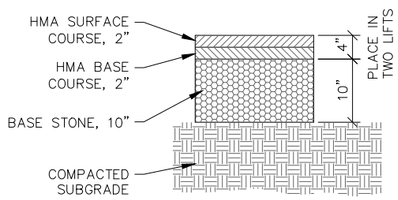

1 C6.01 HMA PATCH

NOT TO SCALE

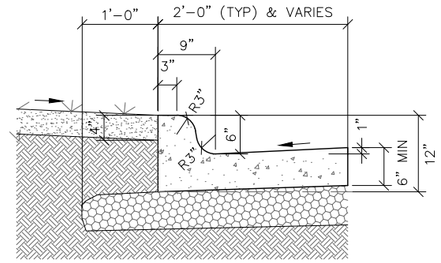

NOTE:
1. CURB AND GUTTER TO MATCH EXISTING. (B6.18 TYP)

2 C6.01 CURB & GUTTER – STANDARD

NOT TO SCALE

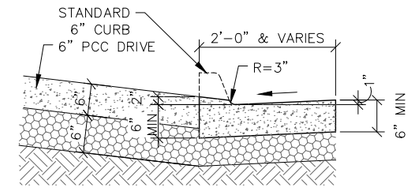

NOTE:
1. CURB AND GUTTER TO MATCH EXISTING.

3 C6.01 CURB & GUTTER – DROP CURB @ DRIVE

NOT TO SCALE

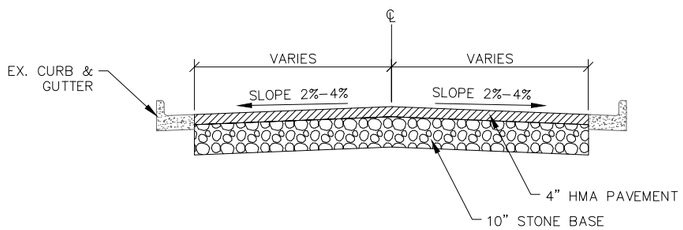

4 C6.01 HMA PAVING REPLACEMENT

NOT TO SCALE

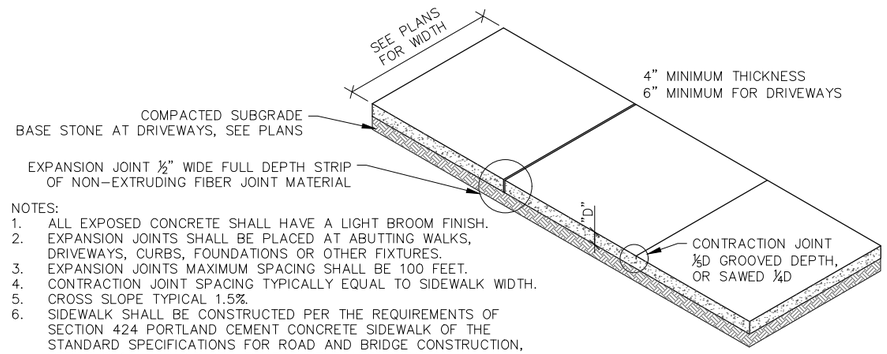

NOTES:
1. ALL EXPOSED CONCRETE SHALL HAVE A LIGHT BROOM FINISH.
2. EXPANSION JOINTS SHALL BE PLACED AT ABUTTING WALKS, DRIVEWAYS, CURBS, FOUNDATIONS OR OTHER FIXTURES.
3. EXPANSION JOINTS MAXIMUM SPACING SHALL BE 100 FEET.
4. CONTRACTION JOINT SPACING TYPICALLY EQUAL TO SIDEWALK WIDTH.
5. CROSS SLOPE TYPICAL 1.5%.
6. SIDEWALK SHALL BE CONSTRUCTED PER THE REQUIREMENTS OF SECTION 424 PORTLAND CEMENT CONCRETE SIDEWALK OF THE STANDARD SPECIFICATIONS FOR ROAD AND BRIDGE CONSTRUCTION, SERIES 2016, ILLINOIS DEPARTMENT OF TRANSPORTATION.
7. CONTRACTOR IS RESPONSIBLE FOR MEETING ALL ADA SIDEWALK AND CROSSING REQUIREMENTS.

9 C6.01 TYPICAL SIDEWALK

NOT TO SCALE

LEGEND

- HMA PAVEMENT
- FULL DEPTH PPC PATCH
- PCC SIDEWALK

ILLINOIS DOT HIGHWAY STANDARD DETAILS	
STANDARD	TITLE
424001–11	PERPENDICULAR CURB RAMPS FOR SIDEWALKS
424006–04	DIAGONAL CURB RAMP FOR SIDWALKS
424016–05	MID–BLOCK CURB RAMP FOR SIDEWALKS
424021–05	DEPRESSED CORNER FOR SIDEWALKS
424026–03	ENTRANCE/ALLEY PEDESTRIAN CROSSING
442001–04	CLASS A PATCHES

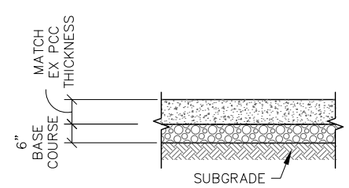

PCC PAVEMENT PATCH SECTION

NOTES:
1. PCC PAVEMENT PATCHES SHALL BE CONSTRUCTED PER THE REQUIREMENTS OF SECTION 442 PAVEMENT PATCHING, OF THE STANDARD SPECIFICATIONS FOR ROAD AND BRIDGE CONSTRUCTION, SERIES 2016, ILLINOIS DEPARTMENT OF TRANSPORTATION.

20 C6.01 PAVING SECTIONS

NOT TO SCALE

IIW, P.C.
iiw
ARCHITECTURE
CIVIL ENGINEERING
CONSTRUCTION SERVICES
ENVIRONMENTAL ENGINEERING
LAND SURVEYING
MUNICIPAL ENGINEERING
STRUCTURAL ENGINEERING
TRANSPORTATION ENGINEERING
INTEGRITY.EXPERTISE.SOLUTIONS

© COPYRIGHT 2019
ALL RIGHTS RESERVED.
THESE DOCUMENTS HAVE BEEN PREPARED SPECIFICALLY FOR THIS PROJECT ONLY. NO PART OF THIS DOCUMENT MAY BE REPRODUCED OR DISTRIBUTED IN ANY FORM WITHOUT THE PERMISSION OF IIW, P.C. ALL INFORMATION IN THIS DOCUMENT IS CONSIDERED PROPERTY OF IIW, P.C.

Project Description

PAVING DETAILS

CITY OF GALENA
EAST SIDE UTILITY
SYSTEM IMPROVEMENTS

P:\17\054\DRAWINGS\CIVIL\17054 Z2 06 01.DWG 12/13/2019 3:46 PM LYNN NEAL

Drawing Issue Information

Project Mgr: GTB
Drawn By: MPA
Issued For Bidding: 12-16-19 Issued For Construction: .

Rev	Description	Date	By

Sheet No:

C6.01

Project No: 17054

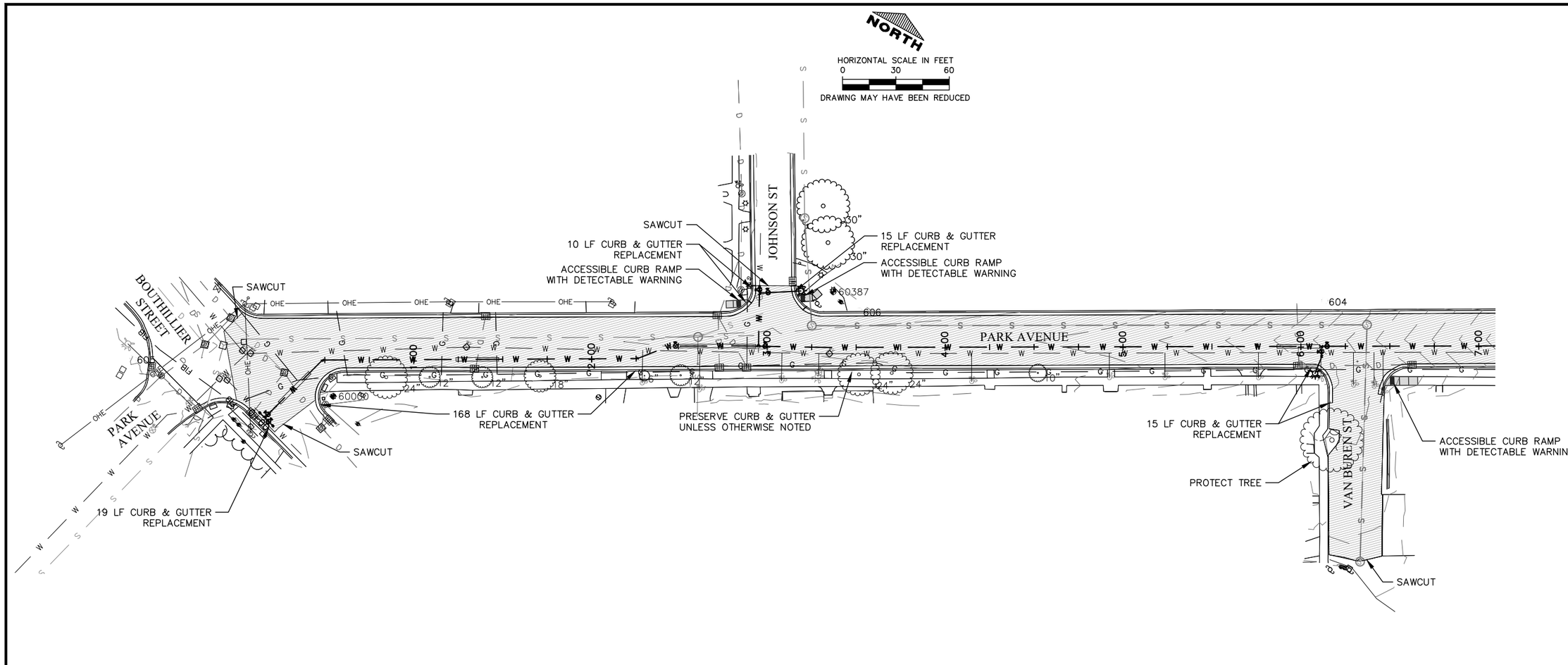

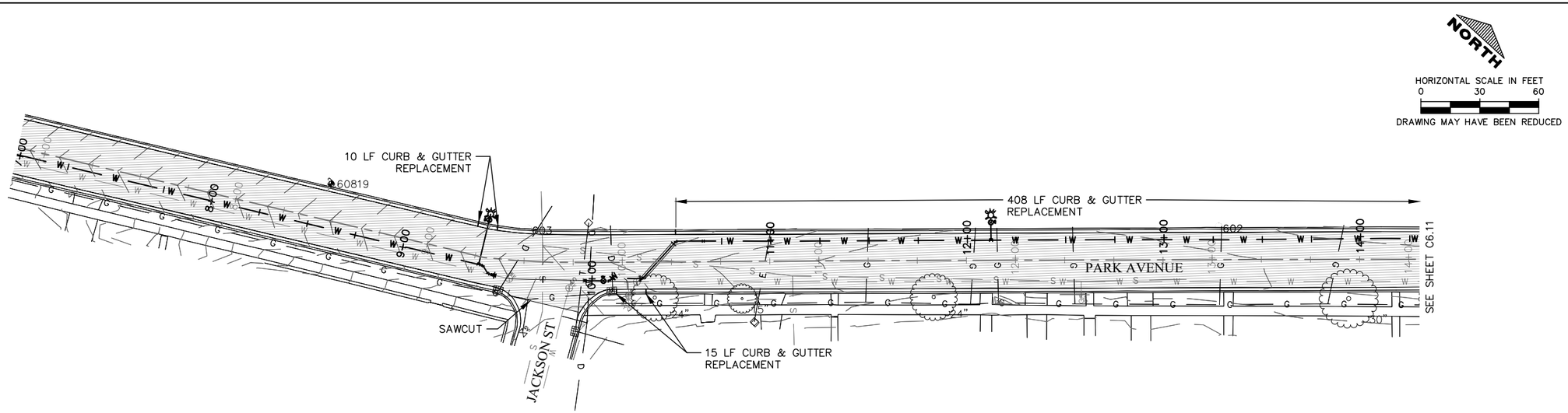

IIW, P.C.

ARCHITECTURE
CIVIL ENGINEERING
CONSTRUCTION SERVICES
ENVIRONMENTAL ENGINEERING
LAND SURVEYING
MUNICIPAL ENGINEERING
STRUCTURAL ENGINEERING
TRANSPORTATION ENGINEERING

INTEGRITY.EXPERTISE.SOLUTIONS

© COPYRIGHT 2019
ALL RIGHTS RESERVED.
THESE DOCUMENTS HAVE BEEN PREPARED SPECIFICALLY FOR THIS PROJECT ONLY. NO PART OF THIS DOCUMENT MAY BE REPRODUCED OR DISTRIBUTED IN ANY FORM WITHOUT THE PERMISSION OF IIW, P.C. ALL INFORMATION IN THIS DOCUMENT IS CONSIDERED PROPERTY OF IIW, P.C.

Project Description

PAVING PLANS
PARK AVENUE
CITY OF GALENA
EAST SIDE UTILITY
SYSTEM IMPROVEMENTS

P:\17\054\DRAWINGS\CIVIL\17054_ZZ_06 P.DWG 12/13/2019 3:47 PM LYNN NEAL

Drawing Issue Information

Drawn By: MPA
Project Mgr: GTB
Issued For Bidding: 12-16-19 Issued For Construction: .

Rev	Description	Date	By
.	.	.	.
.	.	.	.

Sheet No:
C6.10
Project No: 17054

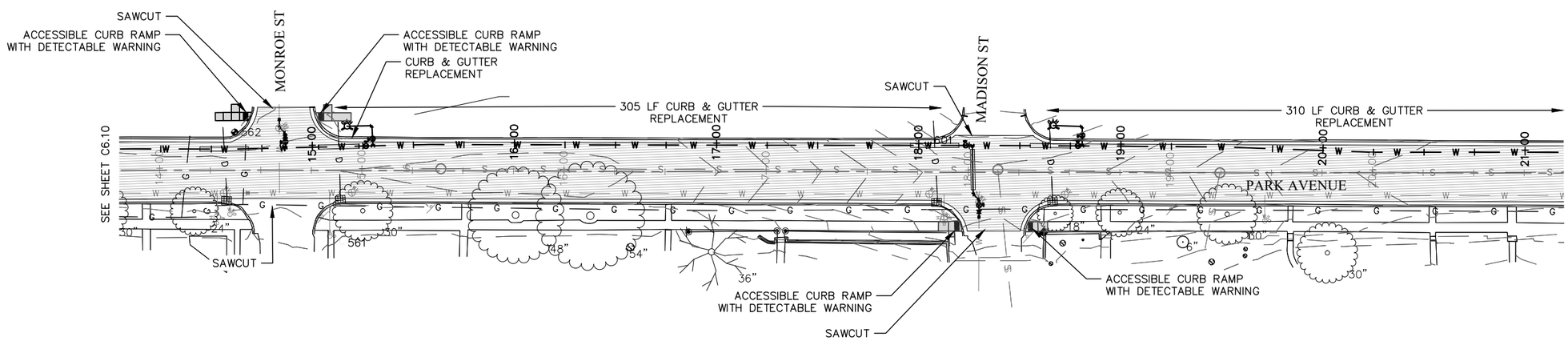

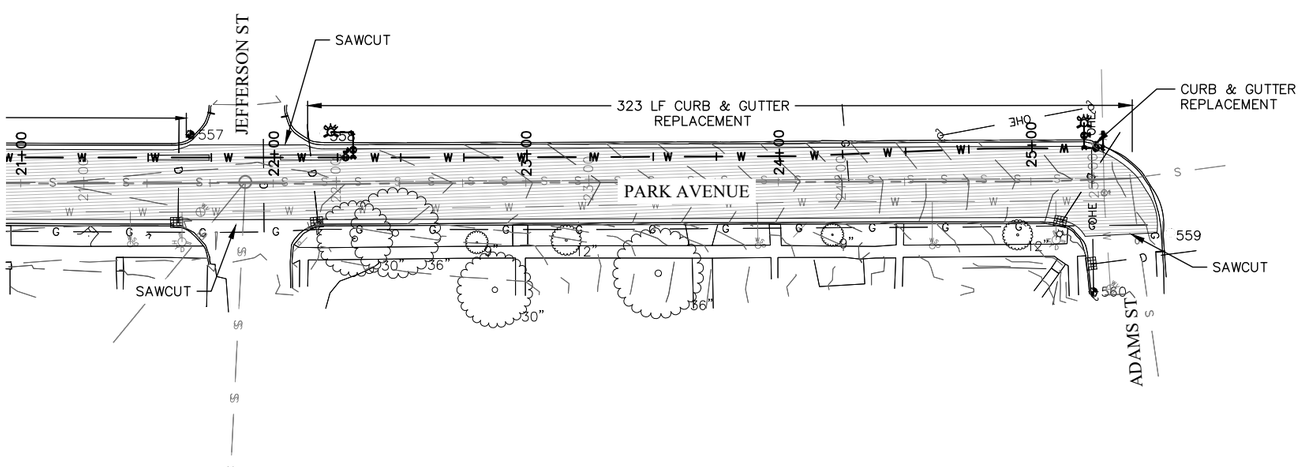

NORTH

HORIZONTAL SCALE IN FEET
0 30 60

DRAWING MAY HAVE BEEN REDUCED

NORTH

HORIZONTAL SCALE IN FEET
0 30 60

DRAWING MAY HAVE BEEN REDUCED

IIW, P.C.
iiw
ARCHITECTURE
CIVIL ENGINEERING
CONSTRUCTION SERVICES
ENVIRONMENTAL ENGINEERING
LAND SURVEYING
MUNICIPAL ENGINEERING
STRUCTURAL ENGINEERING
TRANSPORTATION ENGINEERING
INTEGRITY.EXPERTISE.SOLUTIONS

© COPYRIGHT 2019
ALL RIGHTS RESERVED.
THESE DOCUMENTS HAVE BEEN PREPARED SPECIFICALLY FOR THIS PROJECT ONLY. NO PART OF THIS DOCUMENT MAY BE REPRODUCED OR DISTRIBUTED IN ANY FORM WITHOUT THE PERMISSION OF IIW, P.C. ALL INFORMATION IN THIS DOCUMENT IS CONSIDERED PROPERTY OF IIW, P.C.

Project Description

PAVING PLANS
PARK AVENUE
CITY OF GALENA
EAST SIDE UTILITY
SYSTEM IMPROVEMENTS

P:\17\054\DRAWINGS\CIVIL\17054 ZZ 06 P.DWG 12/13/2019 3:47 PM LYNN NEAL

Drawing Issue Information

Project Mgr: GTB
Drawn By: MPA
Issued For Bidding: 12-16-19 Issued For Construction: . .

Rev	Description	Date	By
		.	.
		.	.
		.	.
		.	.
		.	.
		.	.

Sheet No:
C6.11
Project No: 17054

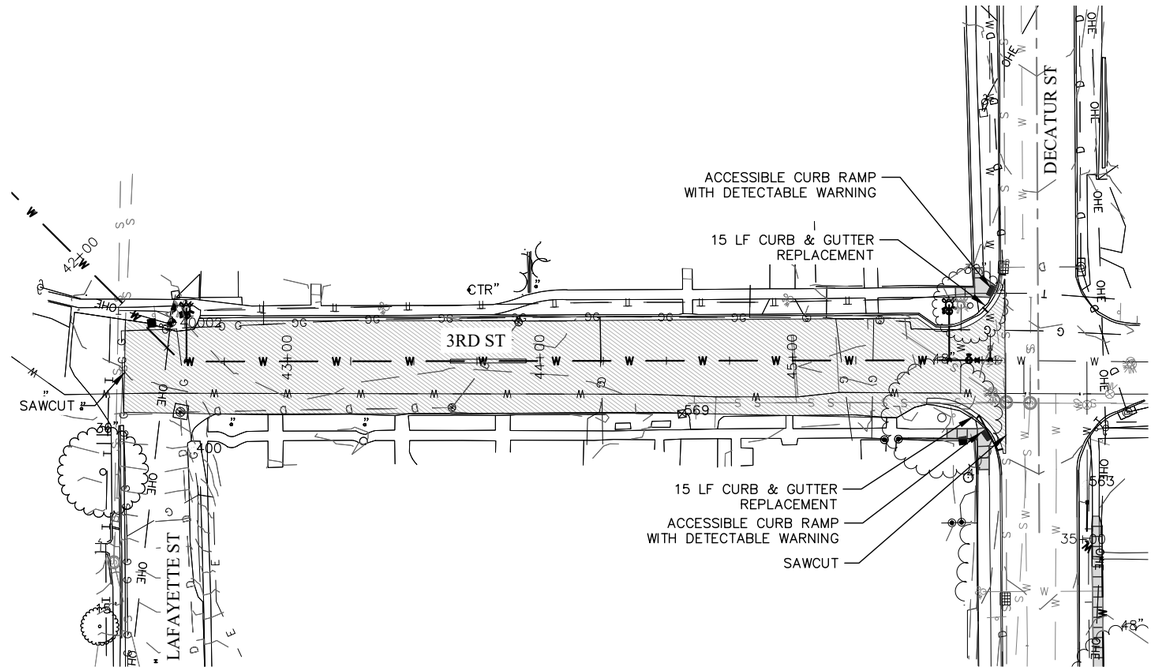

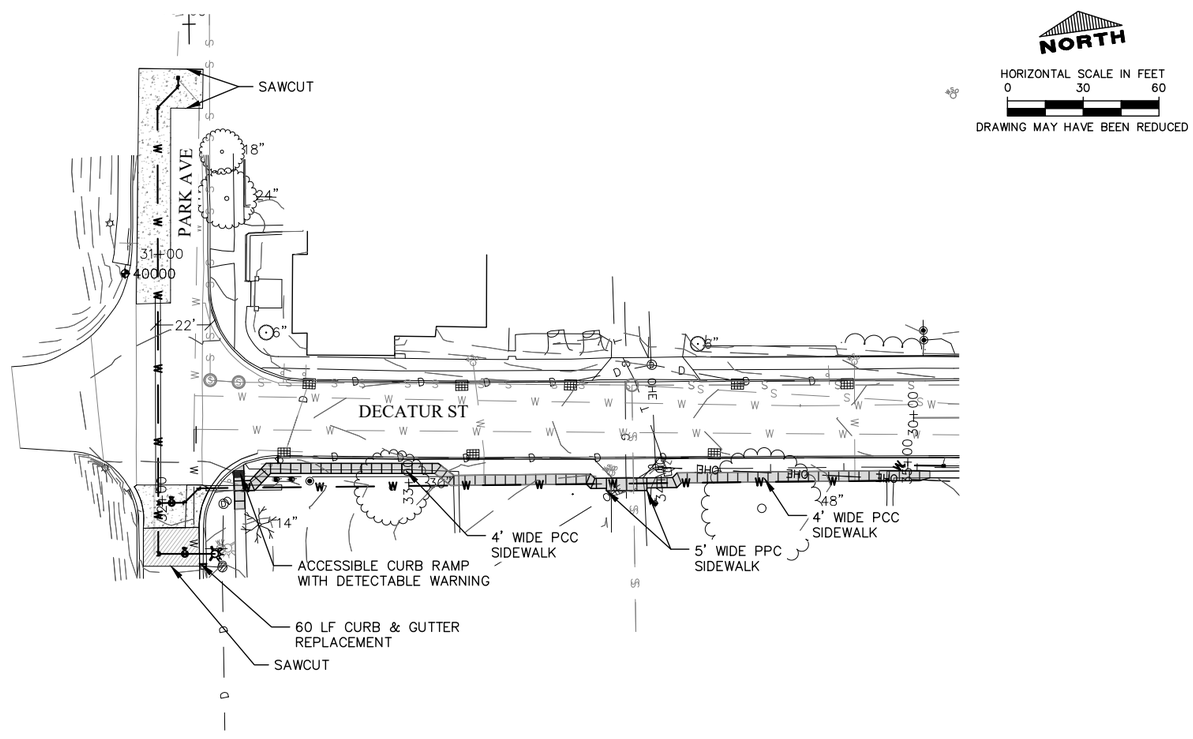

IIW, P.C.

ARCHITECTURE
CIVIL ENGINEERING
CONSTRUCTION SERVICES
ENVIRONMENTAL ENGINEERING
LAND SURVEYING
MUNICIPAL ENGINEERING
STRUCTURAL ENGINEERING
TRANSPORTATION ENGINEERING

INTEGRITY.EXPERTISE.SOLUTIONS

© COPYRIGHT 2019
ALL RIGHTS RESERVED.
THESE DOCUMENTS HAVE BEEN PREPARED SPECIFICALLY FOR THIS PROJECT ONLY. NO PART OF THIS DOCUMENT MAY BE REPRODUCED OR DISTRIBUTED IN ANY FORM WITHOUT THE PERMISSION OF IIW, P.C. ALL INFORMATION IN THIS DOCUMENT IS CONSIDERED PROPERTY OF IIW, P.C.

Project Description

PAVING PLANS
DECATUR ST & 3RD ST
CITY OF GALENA
EAST SIDE UTILITY
SYSTEM IMPROVEMENTS

P:\17\054\DRAWINGS\CIVIL\17054_ZZ_06_P.DWG 12/13/2019 3:47 PM LYNN NEAL

Drawing Issue Information

Drawn By: MPA
Project Mgr: GTB
Issued For Bidding: 12-16-19 Issued For Construction: .

Rev	Description	Date	By
.	.	.	.
.	.	.	.
.	.	.	.
.	.	.	.
.	.	.	.
.	.	.	.

Sheet No:

C6.12

Project No: 17054