SPECIFICATIONS

FOR

GRANT PARK OVAL GARDEN CONSTRUCTION

CITY OF GALENA
101 GREEN STREET
GALENA, IL 61036

MAY 4, 2018

<u>Project must be completed no later than Wednesday, August 15, 2018</u>

TABLE OF CONTENTS

ITEM	PAGE NUMBER
ADVERTISEMENT FOR BIDS	3
INSTRUCTIONS FOR BIDDERS	4
BID DOCUMENT	11
BOND	15
AGREEMENT	17
NOTICE OF AWARD	22
NOTICE TO PROCEED	23
SUPPLEMENTARY CONDITIONS	24
GENERAL REQUIREMENTS	27
WORK CHANGE DIRECTIVE FORM	34
SPECIAL PROVISIONS	35

DRAWINGS: DETAIL A and B, DETAIL C, PLAN A, PLAN B

ADVERTISEMENT FOR BIDS

PROJECT:	**GRANT PARK OVAL GARDEN CONSTRUCTION**
BID DUE DATE:	**Wednesday, May 23, 2018**
BID TIME:	**10:00 A.M**.
BIDS RECEIVED BY OWNER:	City of Galena 101 Green Street Galena, IL 61036
BID OPENING:	Sealed bids will be publicly opened and read at City Hall, 101 Green Street, Galena, Illinois.
PROJECT DESCRIPTION:	Construction of low stone-faced seating walls, paver walkways, and stone centerpiece monument in Grant Park.
DOCUMENTS:	Plans, specifications, and bid forms may be obtained and inspected at the City of Galena, 101 Green Street, Galena, IL 61036. They are also available at www.cityofgalena.org under Departments/Engineering/Bid Documents.
CONDITIONS:	Bids will be on a total sum basis, segregated bids are not acceptable. Contractors for work under this Bid will obligate Contractor and subcontractors not to discriminate in employment practices.
BID SECURITY:	All bids must be accompanied by a bank draft, cashier's check, certified check, or bid bond payable to the City of Galena for 10 percent of the total amount of the bid.
PREVAILING WAGES:	Minimum salaries and fringes to be paid on the contract shall be in accordance with the prevailing wage rate scale established by the United States Department of Labor (DOL) and Illinois Department of Labor (IDOL), such wage rate determinations are included in the project specifications. Contractor must ensure that employees and applicants for employment are not discriminated against because of race, color, religion, sex, national origin or other protected class.
DRUG FREE WORK PLACE	Contractors must comply with the Drug Free Workplace Act (Source: P.A. 86-1459.).

This invitation is given and published pursuant to authorization and direction of the City of Galena. The City of Galena reserves the right to reject any or all Bids or to waive any informalities in the bidding.

By Order of City of Galena, Illinois
Terry Renner, Honorable Mayor

INSTRUCTIONS TO BIDDERS

1. Defined Terms

Terms used in these Instructions to Bidders, which are defined in the standard General Conditions of the Construction Contract, have the meanings assigned to them in the General Conditions. The term "Bidder" means one who submits a Bid directly to the OWNER, as distinct from a sub-bidder, who submits a bid to a Bidder. The term "Successful Bidder" means the lowest, qualified, responsible, and responsive Bidder to whom OWNER (on the basis of OWNERS evaluation as hereinafter provided) makes an award. The term "Bidding Documents" includes the Advertisement or Invitation to Bid, Instructions to Bidders, the Bid Form, and the proposed Contract Documents (including all Addenda issued prior to receipt of Bids).

2. Copies of Bidding Documents

2.1 Complete sets of the Bidding Documents in the number and for the deposit sum, if any, stated in the Advertisement or Invitation to Bid may be obtained from the ENGINEER. The deposit will be refunded to document holders of record who return the Bidding Documents in good condition within thirty days after opening of Bids as stipulated by the Invitation to Bid.

2.2 Complete sets of Bidding Documents must be used in preparing Bids; neither OWNER nor ENGINEER assumes any responsibility for errors or misinterpretations resulting from the use of incomplete sets of Bidding Documents.

2.3 OWNER and ENGINEER in making copies of Bidding Documents available on the above terms do so only for the purpose of obtaining Bids on the Work and do not confer a license or grant for any other use.

3. Qualifications of Bidders

To demonstrate qualifications to perform the Work, each Bidder must be prepared to submit within five days of OWNER'S request written evidence, such as financial data, previous experience, present commitments and other such data that may be called for below or in the supplementary Instructions. Each Bid must contain evidence of Bidder's qualifications to do business in the state where the Project is located or covenant to obtain such qualification prior to award of the contract.

4. Examination of Contract Documents and Site

4.1 It is the responsibility of each Bidder before submitting a Bid, to (a) examine the Contract Documents thoroughly, (b) visit the site to become familiar with local conditions that may affect cost, progress, performance, or federal, state, and local Laws and Regulations that may affect cost, progress, performance, or furnishing of the Work, (c) study and carefully correlate Bidder's observations with the Contract Documents, and (d) notify ENGINEER of all conflicts, errors, or discrepancies in the Contract Documents.

4.2 Reference is made to the supplementary conditions for identification of:

4.2.1. Those reports of exploration and tests of subsurface conditions at the site which have been utilized by ENGINEER in preparation of the Contract Documents. Bidder may rely upon the accuracy of the technical data contained in such reports but not upon non-technical data, interpretations, or opinions contained therein or for the completeness thereof for the purpose of bidding or construction.

4.2.2. Those drawings of physical conditions in or relating to existing surface and subsurface conditions (except underground Facilities) which are at or contiguous to the site which have been utilized by ENGINEER in preparation of the Contract Documents. Bidder may rely upon the accuracy of the technical data contained in such drawings but not upon the completeness thereof for the purposes of bidding or construction.

OWNER will make copies of such reports and drawings available to any Bidder on request. Those reports and drawings are not part of the Contract Documents, but the technical data contained therein upon which Bidder is entitled to rely as provided in paragraphs 4.2.1 and 4.2.2 are incorporated therein by reference. Such technical data has been identified and established in the Supplementary Conditions.

4.3 Information and data reflected in the Contract Documents with respect to Underground Facilities at or contiguous to the site is based upon information and data furnished to OWNER and ENGINEER by owners of such Underground Facilities, and OWNER does not assume responsibility for the accuracy or completeness thereof unless it is expressly provided otherwise in the Supplementary Conditions.

4.4 Provisions concerning responsibilities for the adequacy of data furnished to prospective Bidders on subsurface conditions, Underground Facilities and other physical conditions, and possible changes in the Contract Documents due to differing conditions appear in paragraph 4.2 and 4.3 of the General Conditions.

4.5 Before submitting a Bid each Bidder will, at Bidder's own expense, make or obtain any additional examinations, investigations, explorations, tests, and studies and obtain any additional information and data which pertain to the physical conditions (surface, subsurface, and Underground Facilities) at or contiguous to the site or otherwise which may affect cost, progress, performance, or furnishing of the Work and which Bidder deems necessary to determine its bid for performing and furnishing the Work in accordance with the time, price, and other terms and conditions of the Contract Documents.

4.6 On request in advance, OWNER will provide each Bidder access to the site to conduct such explorations and tests as each bidder deems necessary for submission of a Bid. Bidder shall fill all holes, clean up and restore the site to its former condition upon completion of such explorations.

4.7 The lands upon which the Work is to be performed, rights-of-way, and easements for access thereto and other lands designated for use by CONTRACTOR in performing the Work are identified in the Contract Documents. All additional lands and access thereto required for temporary construction facilities or storage of materials and equipment are to be provided by CONTRACTOR. Easements for permanent structures or permanent changes in existing structures are to be obtained and paid for by OWNER unless otherwise provided in the Contract Documents.

4.8 The submission of a Bid will constitute an incontrovertible representation by Bidder that Bidder has complied with every requirement of this Article, that without exception the Bid is premised upon performing and furnishing the Work required by the Contract Documents and such means, methods., techniques, sequences, or procedures of construction as may be indicated in or required by the Contract Documents, and that the Contract Documents are sufficient in scope and detail to indicate and convey understanding of all terms and conditions for performance and furnishing of the Work.

4.9 All enquiries and questions about the contract documents are to be made in writing, preferably by email, sent to Andy Lewis - City Engineer at: alewis@cityofgalena.org

5. Interpretations and Addenda

5.1 All questions about the meaning or intent of the Contract Documents are to be directed to ENGINEER. Interpretations or clarifications considered necessary by ENGINEER in response to such questions will be issued by Addenda mailed or delivered to all parties recorded by ENGINEER as having received the Bidding Documents. Questions received less than ten days prior to the date for opening of Bids may not be answered. Only questions answered by formal written Addenda will be binding. Oral and other interpretations or clarifications will be without legal effect.

5.2 Addenda may also be issued to modify the Bidding Documents as deemed advisable by OWNER or ENGINEER.

6. Bid Security

Each Bid must be accompanied by Bid security made payable to OWNER in an amount of **ten percent** of the Bidder's maximum Bid price and in the form of a certified check or bank check or a Bid Bond (on form attached, if a form is prescribed) issued by a surety meeting the requirements of paragraph 5.1 of the General Conditions.

6.2 The Bid security of the successful Bidder will be retained until such Bidder has executed the Agreement and furnished the required contract security, whereupon the Bid security will be returned. If the successful Bidder fails to execute and deliver the Agreement and furnish the required contract security within fifteen days after the Notice of Award, OWNER may annul the Notice of Award and the Bid security of that Bidder will be forfeited. The Bid security of other Bidders whom OWNER believes to have a reasonable chance of receiving the award may be retained by OWNER until the earlier of the seventh day after the Effective Date of the Agreement or the forty-sixth day after the Bid opening, whereupon Bid security furnished by such Bidders will be returned. Bid security with Bids, which are not competitive, will be returned within seven days after the Bid opening.

7. Contract Time

The times for substantial Completion and final completion are set forth in the Agreement. It will be necessary for the successful Bidder to satisfy OWNER of Bidder's ability to achieve substantial completion and final completion within the times designated in the Agreement.

8. Liquidated Damages

Provisions for liquidated damages, if any, are set forth in the Agreement.

9. Substitute or "Or-Equal" Items

The Contract, if awarded, will be on the basis of materials and equipment described in the Drawings or specified in the specifications that a substitute or "or-equal" item of material or equipment may be furnished or used by CONTRACTOR if acceptable to ENGINEER, until after the Effective Date of the Agreement.

10. Subcontractors, Suppliers and Others

10.1 If the Supplementary Conditions require the identity of certain Subcontractors, Suppliers, and other persons and organizations (including those who are to furnish the principal items of material and equipment) to be submitted to OWNER in advance of the specified date prior to the Effective Date of the Agreement, the apparent Successful Bidder, and any other Bidder so requested, shall within seven days after the Bid opening submit to OWNER a list of all such Subcontractors, Suppliers, and other persons and organizations proposed for those portions of the Work for which such identification is required.

Such list shall be accompanied by an experience statement with pertinent information regarding similar projects and other evidence of qualification for each Subcontractor, Supplier, person or organization if requested by OWNER. If OWNER after due investigation has reasonable objection to any proposed Subcontractor, Supplier, other person or organization, either may before the Notice of Award is given request the apparent Successful Bidder to submit an acceptable substitute without any change in Bid price.

If apparent Successful Bidder declines to make any such substitution, OWNER may award contract to the next lower Bidder that proposes to use acceptable Subcontractors, Suppliers, and other persons and organizations The declining to make requested substitutions will not constitute grounds for sacrificing the Bid security of any Bidder. Any Subcontractor, Supplier, other person or organization listed and to whom OWNER does not make written objection prior to the giving of the Notice of Award will be deemed acceptable to OWNER subject to revocation of such acceptance after the Effective Date of the Agreement as provided in Paragraph 6.8.2 of the General Conditions.

10.2 In contracts where the Contract Price is on the basis of Cost-of-the-work Plus a Fee, the apparent Successful Bidder, prior to the Notice of Award, shall identify in writing to OWNER those portions of the Work that such Bidder proposes to subcontract and after the Notice of Award may only subcontract other portions of the Work with OWNER'S written consent.

10.3 No CONTRACTOR shall be required to employ any Subcontractor, Supplier, other person or organization against whom CONTRACTOR has reasonable objection.

11. Bid Form

11.1 The Bid Form is included with the Bidding Documents; additional copies may be obtained from City of Galena.

11.2 All blanks on the Bid Form must be completed in ink or by a typewriter.

11.3 Bids by corporations must be executed in the corporate name by the president or a vice-president (or other corporate officer accompanied by evidence of authority to sign) and the corporate seal must be affixed and attested by the secretary or an assistant secretary. The corporate address and state of incorporation must be shown below the signature.

11.4 Bids by partnerships must be executed in the partnership name and signed by a partner, whose title must appear under the signature and the official address of the partnership must be shown below the signature.

11.5 All names must be typed or printed below the signature.

11.6 The bid shall contain an acknowledgment of receipt of all Addenda (the numbers of which must be filled in on the Bid Form).

11.7 The address and telephone number for communications regarding the Bid must be shown.

12. Submission of Bids

Bids shall be submitted at the time and place indicated in the Advertisement or Invitation to Bid and shall be enclosed in an opaque sealed envelope, marked with the Project title (and, if applicable, the designated portion of the project for which the Bid is submitted) and name and address of the Bidder and accompanied by the Bid security and other required documents. If the Bid is sent through the mail or other delivery system the sealed envelope shall be enclosed in a separate envelope with the notation "BID ENCLOSED" on the face of it.

13. Modifications and Withdrawal of Bids

13.1 Bids may be modified or withdrawn by an appropriate document duly executed (in the manner that a Bid must be executed) and delivered to the place where Bids are to be submitted at any time prior to the opening of Bids.

13.2 If, within twenty-four hours after Bids are opened, any Bidder files a duly signed, written notice with OWNER and promptly thereafter demonstrates to the reasonable satisfaction of OWNER that there was a material and substantial mistake in the preparation of its Bid, that Bidder may withdraw its Bid and the Bid security will be returned. Thereafter, that Bidder will be disqualified from further bidding on the Work to be provided under the Contract Documents.

14. Opening of Bids

Bids will be opened and (unless obviously non-responsive) read aloud publicly. An abstract of the amounts of the base Bids and major alternates (if any) will be made available to Bidders after the opening of Bids.

15. Bids to Remain Subject to Acceptance

All bids will remain subject to acceptance for forty-five days after the day of the Bid opening, but OWNER may, in its sole discretion, release any Bid and return the Bid security prior to that date.

16. Award of Contact

16.1 OWNER reserves the right to reject any and all Bids, to waive any and all informalities not involving price, time, or changes in the Work and to negotiate contract terms with the Successful Bidder, and the right to disregard all non-conforming, non-responsive, unbalanced, or conditional Bids. Also, OWNER reserves the right to reject the Bid of any Bidder if OWNER believes that it would not be in the best interest of the Project to make an award to that Bidder, whether because the Bid is not responsive or the Bidder is unqualified or of doubtful financial ability or fails to meet any other pertinent standard or criteria established by OWNER. Discrepancies in the multiplication of units of Work and unit prices will be resolved in favor of the unit prices. Discrepancies between the indicated sum of any column of figures and the correct sum thereof will be resolved in favor of the correct sum.

16.2 In evaluating Bids, OWNER will consider the qualifications of the Bidders, whether or not the Bids comply with the prescribed requirements, and such alternates, unit prices, and other data, as may be requested in the Bid Form or prior to the Notice of Award.

16.3 OWNER may consider the qualifications and experience of Subcontractors, Suppliers, and other persons and organizations proposed for those portions of the Work as to which the identity of Subcontractors, Suppliers, and other persons and organizations must be submitted as provided in the Supplementary Conditions. OWNER also may consider the operating costs, maintenance requirements, performance data, and guarantees of major items of materials and equipment proposed for incorporation in the Work when such data is required to be submitted prior to the Notice of Award.

16.4 OWNER may conduct such investigations as OWNER deems necessary to assist in the evaluation of any Bid and to establish the responsibility, qualifications, and financial ability of Bidders, proposed Subcontractors, Suppliers, and other persons and organizations to perform and furnish the Work in accordance with the Contract Documents to OWNER'S satisfaction within the prescribed time.

16.5 If the contract is to be awarded, it will be awarded to the lowest Bidder whose evaluation by OWNER indicates to OWNER that the award will be in the best interests of the Project.

16.6 If the lowest Bid received exceeds the available funding, the OWNER reserves the right to negotiate the deduction of items necessary to meet funding limits with the lowest Bidder prior to award of contract.

16.7 If the contract is to be awarded, OWNER will give the Successful Bidder a Notice of Award within forty-five days after the day of the Bid opening.

~~17. Contract Security~~

~~Paragraph 5.1 of the General Conditions and the Supplementary Conditions set forth OWNER'S requirements as to performance and payment Bonds. When the Successful Bidder delivers the executed Agreement to OWNER, it must be accompanied by the required performance and payment Bonds.~~

Payment and Performance bonds are not required for this project.

18. Signing of Agreement

When OWNER gives a Notice of Award to the Successful Bidder, it will be accompanied by the required number of unsigned counterparts of the Agreement. Within fifteen days thereafter CONTRACTOR shall sign and deliver the required number of counterparts of the Agreement to OWNER with the required Bonds. Within ten days thereafter OWNER shall deliver one fully signed counterpart to CONTRACTOR.

19. Sales and Use Taxes

OWNER is exempt from Illinois State Sales and Use Taxes on materials and equipment to be incorporated in the Work (exemption No.E9996-1725-02). Said taxes shall not be included in the Contract Price. Refer to Supplementary Conditions SC-6.15 for additional information.

20. Retainage

Provisions concerning retainage and CONTRACTOR'S rights to deposit securities in lieu of retainage are set forth in the Agreement.

21. Waivers of Lien

CONTRACTORS shall hold OWNER safe and free from all claims and liens and shall deliver to the OWNER waivers of lien and CONTRACTOR'S affidavit, short form, embracing the labor and materials included in payments as requested by the Contractor.

22. Prevailing Wage

All work done under this Contract shall be subject to Illinois laws relating to Prevailing Wages and Illinois Preference to Citizens on Public Works and Arbitration. Burden for compliance with these laws rests with the contractor.

Effective August 10, 2005 contractors and subcontractors on public works projects must submit certified payroll records on a weekly basis to the project administrator in charge of the construction project, along with a statement of compliance affirming that such records are true and accurate, that the wages paid to each worker are not less than the required prevailing rate and that the contractor is aware that filing records he or she knows to be false is a Class B misdemeanor. Refer also to Section 17 of General Requirements.

Effective January 1, 2010, all contractors shall provide written notice to its subcontractors of their duty to comply with the prevailing wage rate. The contractor shall provide the City with verification of such notice.

23. Drug Free Workplace

All work done under this Contract must comply with the Drug Free Workplace Act
(Source: P.A. 86-1459.).

BID DOCUMENT

Project Identification: **GRANT PARK OVAL GARDEN CONSTRUCTION**

Contract Identification and Number: **NA**

This Bid is submitted to:

City of Galena
101 Green Street
Galena, IL 61036

1. The undersigned BIDDER proposes and agrees, if this Bid is accepted, to enter into an agreement with owner in the form included in the Contract Documents to perform and furnish all work as specified or indicated in the Contract Documents for the Contract Price and within the Contract Time indicated in this Bid and in accordance with the other terms and conditions of the Contract Documents.

2. BIDDER accepts all of the terms and conditions of the Advertisement or Invitation to Bid and Instructions to BIDDERS, including without limitation those dealing with the disposition of Bid security. This Bid will remain subject to acceptance for forty-five days after the day of Bid opening. BIDDER WILL SIGN AND SUBMIT THE AGREEMENT with the Bonds and other documents required by the Bidding Requirements within fifteen days after the date of OWNER's Notice of Award.

3. In submitting this Bid, BIDDER represents, as more fully set forth in the Agreement that;

a. BIDDER has examined copies of all the Bidding Documents and of the following Addenda (receipt of all which is hereby acknowledged):

Date	Number
_____	_____

b. BIDDER has familiarized itself with the nature and extent of the Contract Documents, Work, site, locality, and all local conditions and Laws and Regulations that in any manner may affect cost, progress, performance or furnishing of the Work.

c. BIDDER has studied carefully all reports and drawings of subsurface conditions and drawings of physical conditions which are identified in the Supplementary Conditions as provided in paragraph 4.2 of the General Conditions, ands accept the determination set forth in paragraph SC-4.2 of the Supplementary Conditions of the extent of the technical data contained in such reports and drawings upon which BIDDER is entitled to rely.

d. BIDDER has obtained and carefully studied (or assumes responsibility for obtaining and carefully studying) all such examinations, investigations, explorations, tests, and studies (in addition to or to supplement those referred to in (c) above) which pertain to the subsurface or physical conditions at the site or otherwise may affect the Work as BIDDER considers necessary for the performance or furnishing of the Work at the Contract Price, within the Contract Time and in

accordance with the other terms and conditions of the Contract Documents, including specifically the provisions of paragraph 4.2 of the General Conditions; and no additional examinations, investigations, explorations, tests, reports or similar information or data are or will be required by BIDDER for such purposes.

e. BIDDER has reviewed and checked all information and data shown or indicated on the Contract Documents with respect to existing Underground Facilities at or contiguous to the site and assumes responsibility for the accurate location of said Underground Facilities. No additional examinations, investigations, explorations, tests, reports or similar information or data in respect of said Underground Facilities are or will be required by BIDDER in order to perform and furnish the Work at the Contract Price, within the Contract Time and in accordance with the other terms and conditions of the Contract Documents, including specifically the provisions of paragraph 4.3 of the General Conditions.

f. BIDDER has correlated the results of all such observations, examinations, visits to the site, investigations, explorations, tests, data, reports and studies with the terms and conditions of the Contract Documents.

g. BIDDER has given OWNER written notice of all conflicts, errors or discrepancies that he has discovered in the Contract Documents and the written resolution thereof by ENGINEER is acceptable to BIDDER.

h. The Bid is genuine and not made in the interest of or on behalf of any undisclosed person, firm, or corporation and is not submitted in conformity with any agreement or rules of any group, association, organization, or corporation; BIDDER has not directly or indirectly induced or solicited any other BIDDER to submit a false or sham Bid; BIDDER has not solicited or induced any person, firm, or corporation to refrain from bidding; and BIDDER has not sought by collusion to obtain for itself any advantage over any other BIDDER or over OWNER.

i. Bidder is familiar with and is satisfied as to all federal, state and local laws and Regulations that may affect cost, progress, performance and finishing the work.

4. Bidder will complete work for the costs indicated in the table on the following page titled “Grant Par Oval Garden Construction: Bid Form”.

GRANT PARK OVAL GARDEN CONSTRUCTION: BID FORM

ITEM	DESCRIPTION	UNIT	QUANTITY	UNIT COST $	TOTAL $
1	Construct low seating wall on east end of oval (see Detail A)	Sum	1		
2	Construct low seating wall on west end of oval (see Detail A)	Sum	1		
3	Install urn stand footing and base (see Detail B)	Sum	4		
4	Construct large center urn stand (see Detail C)	Sum	1		
5	Construct clay brick paver entry walkways and center urn surround (with appropriate base) (see Plan A1)	Sum	1		
6	Install saw cut limestone stepping stones (see Plan A1)	Sum	8		
7	Install limestone border adjacent to perimeter sidewalk (between ends of seating walls and entry walkways) (see Plan A1)	Linear Feet	56		
8	Excavate interior earthen areas of oval garden and fill with 12 inches of topsoil and organic compost. Grade to level with adjacent pavers.	Sum	1		
	TOTAL				
	ALTERNATE ITEMS				
A1	Substitute concrete in stamped brick pattern for clay brick pavers	Sum	1		
A2	Remove sections of existing sidewalk surrounding oval garden and replace with 5” thick sidewalk with *broom finished* concrete	SF	1		
A3	Remove sections of existing sidewalk surrounding oval garden and replace with 5” thick sidewalk with *exposed aggregate* finished concrete	SF	1		
A4	Install 40 Schedule conduit for low voltage electric from outside of oval garden perimeter to the center urn base and each of the four small urn bases. Bury depth of 24 inches.	Sum	1		
	TOTAL ALTERNATES				

All specific cash allowances are included in the price (s) set forth above and have been computed in accordance with paragraph 11.8 of the General Conditions.

5. BIDDER agrees that the Work will be substantially completed and ready for final payment in accordance with paragraphs 14.13 of the General Conditions on or before the dates or within the number of calendar days indicated in the Agreement.

   BIDDER accepts the provisions of the Agreement as to liquidated damages in the event of failure to complete the Work on time.

6. The following document is attached to and made a condition of this Bid:

   Required Bid security in the form of _____.

7. Communications concerning this Bid shall be addressed to the address of the BIDDER indicated below.

   The following address:

   _____

   _____

8. The terms used in this Bid which are defined in the General Conditions of the Construction Contract included as part of the Contract Documents have the meanings assigned to them in the General Conditions.

Submitted on _____, 20 ____

Respectfully submitted:

_____ _____
Signature

_____ _____
Title

_____ _____
License Number Address
(If Applicable)

_____
Date

(SEAL if BID is by a corporation)

Attest: _____

BID BOND

KNOW ALL MEN BY THESE PRESENTS, that we, the undersigned,

_____ as Principal and

_____as Surety are

hereby held and firmly bound unto _____ as OWNER

in the penal sum of _____ for the

payment of which, well and truly to be made, we hereby jointly and severally bind ourselves, successors and assigns.

Signed this _____ day of _____, 20 _____.

The Condition of the above obligation is such that whereas

the Principal has submitted to _____

a certain BID, attached hereto and hereby made a part hereof to enter into a contract in writing, for the

_____

_____

_____

NOW, THEREFORE,

a. If said Bid shall be rejected, or

b. If said BID shall be accepted and the Principal shall execute and deliver a contract in the Form of Contract attached hereto (properly completed in accordance with said BID) and shall furnish a BOND for his faithful performance of said contract, and for the payment of all persons performing labor or furnishing materials in connection therewith, and shall in all other respects perform the agreement created by the acceptance of said BID,

then this obligation shall be void, otherwise the same shall remain in force and effect; it being expressly understood and agreed that the liability of the Surety for any and all claims there under shall, in no event, exceed the penal amount of this obligation as herein stated.

The Surety, for value received, hereby stipulates and agrees that the obligations of said Surety and its BOND shall be in no way impaired or affected by any extension of the time within which the OWNER may accept such BID; and said Surety does hereby waive notice of any such extension.

IN WITNESS WHEREOF, the Principal and the Surety have hereunto set their hands and seals, and such of them as are corporations have caused their corporate seals to be hereunto affixed and these presents to be signed by their property officers, the day and year first set forth above.

_____ (Legal Seal)
Principal

_____
Surety

By: _____

IMPORTANT: Surety companies executing BONDS must appear on the Treasury Department's most current list (Circular 570 as amended) and be authorized to transact business in the state where the project is located.

STANDARD FORM OF AGREEMENT
BETWEEN OWNER AND CONTRACTOR
ON THE BASIS OF A STIPULATED PRICE

THIS AGREEMENT is dated as of the **……..** in the year **2018** by and between the CITY OF GALENA, Illinois (hereinafter called OWNER) and **……** (hereinafter called CONTRACTOR).

OWNER and CONTRACTOR, in consideration of the mutual covenants hereinafter set forth, agree as follows:

1. Work

CONTRACTOR shall complete all Work as specified or indicated in the Contract Documents. The Work is generally described as follows:

GRANT PARK OVAL GARDEN CONSTRUCTION

The project for which the Work under the Contract Documents may be the whole or only a part is generally described as follows:

GRANT PARK OVAL GARDEN CONSTRUCTION

2. ENGINEER

The project has been designed by City Engineer, City of Galena who is hereinafter called ENGINEER and who is to act as OWNER'S representative, assume all duties and responsibilities and have the rights and authority assigned to ENGINEER in the Contract Documents in condition with completion of the Work in accordance with the Contract Documents.

3. Contract Time

3.1 The Work will be substantially completed **nine weeks after the commencement date** and completed and ready for final payment in accordance with paragraphs 14.13 of the General Conditions. **Commencement date will be Monday, June 11, 2018 and substantial completion will be Monday, August 13, 2018.**

3.2 Liquidated Damages. OWNER and CONTRACTOR recognize that time is of the essence of this Agreement and the OWNER will suffer financial loss if the work is not completed within the times specified in paragraph 3.1 above, plus any extensions thereof allowed in accordance with Article 12 of the General Conditions. They also recognize the delays, expense and difficulties involved in proving in a legal or arbitration proceeding the actual loss suffered by OWNER if the Work is not completed on time. Accordingly, instead of requiring any such proof, OWNER and CONTRACTOR agree that as liquidated damages for delay (but not as a penalty) CONTRACTOR shall pay OWNER **two hundred dollars ($200.00)** for each day that expires after the time specified in paragraph 3.1 for completion and readiness for final payment.

4. Contract Price

4.1 OWNER shall pay CONTRACTOR for completion of the Work in accordance with the Contract Documents in current funds for the bid price of **$.....**

5. Payment Procedures

CONTRACTOR shall submit Applications for Payment in accordance with Article 14 of the General Conditions. Applications for Payment will be processed by ENGINEER as provided in the General Conditions.

5.1 Progress Payment. OWNER shall make progress payments on account of the Contract Price on the basis of CONTRACTOR'S Applications for Payment as recommended by ENGINEER, on or about the 25th day of each month during construction as provided below. All progress payments will be on the basis of the progress of the Work measured by the schedule of values established in paragraph 2.9 of the General Conditions (and in completed) or, in the event there is no schedule of values, as provided in the General Requirements.

5.1.1 Prior to Substantial Completion, progress payment will be made in an amount equal to the percentage indicated below, but, in each case, less the aggregate of payments previously made and less such amounts as ENGINEER shall determine, or OWNER may withhold:

> 90% of Work completed. If Work has been 80% completed as determined by ENGINEER, and if the character and progress of the Work have been satisfactory to OWNER and ENGINEER, OWNER on recommendation of ENGINEER, may determine that as long as the character and progress of the Work remain satisfactory to them, there will be a reduction in the retainage on the remaining progress payments prior to Substantial Completion in an amount equal to 95% of the Work completed.
>
> 90% of materials and equipment not incorporated in the Work (but delivered, suitably stored and accompanied by documentation satisfactory to OWNER as provided in paragraph 14.2 of the General Conditions).

5.1.2 Upon Substantial Completion in an amount sufficient to increase total payment to CONTRACTOR to 95% of the Contract Price, less such amounts as ENGINEER shall determine, or OWNER may withhold, in accordance with paragraph 14.7 of the General Conditions.

5.2 Final Payment. Upon final completion and acceptance of the work in accordance with paragraph 14.13 of the General Conditions, OWNER shall pay the remainder of the Contract Price as recommended by ENGINEER as provided in said paragraph 14.13.

6. Interest

All moneys not paid when due as provided in Article 14 of the General Conditions shall bear interest at the maximum rate allowed by law at the place of the Project.

7. CONTRACTOR Representations

In order to induce OWNER to enter into this Agreement CONTRACTOR makes the following representations.

7.1 CONTRACTOR has familiarized itself with the nature and extent of the Contract Documents, Work, site, locality, and all local conditions and Laws and Regulations that in any manner may affect cost, progress, performance or furnishing of the Work.

7.2 CONTRACTOR has studied carefully all reports of explorations and tests of subsurface conditions and drawings of physical condition which are identified in the Supplementary Conditions and accepts the determination of the extent of the technical data contained in such reports and drawings upon which CONTRACTOR is entitled to reply.

7.3 CONTRACTOR has obtained and carefully studied (or assumes responsibility for obtaining and carefully studying) all such examinations, investigations, explorations, tests, reports and studies (in addition to or to supplement those referred to in paragraph 7.2 above which pertain to the subsurface or physical conditions at or contiguous to the site or otherwise may affect the cost, progress, performance or furnishing of the Work at the Contract Price, within the Contract Time and in accordance with the other terms and conditions of the Contract Documents, including specifically the provisions of paragraph 4.2 of the General Conditions; and no additional examinations, investigations, explorations, tests, reports, studies or similar information or data are or will be required by CONTRACTOR for such purposes.

7.4 CONTRACTOR has reviewed and checked all information and data shown or indicated on the Contract Documents with respect to existing Underground Facilities at or contiguous to the site and assumes responsibility for the accurate location of said Underground Facilities. No additional examinations, investigations, explorations, tests, reports, studies or similar information or data in respect of said Underground Facilities are or will be required by CONTRACTOR in order to perform and furnish the Work at the Contract Price, within the Contract Time and in accordance with the other terms and conditions of the Contract Documents.

7.5 CONTRACTOR has correlated the results of all such observations, examinations, investigations, explorations, tests, reports and studies with the terms and conditions of the Contract Documents.

7.6 CONTRACTOR has given ENGINEER written notice of all conflicts, errors or discrepancies that he has discovered in the Contract Documents and the written resolution thereof by ENGINEER is acceptable to CONTRACTOR.

8. Contract Documents

The Contract Documents which comprise the entire agreement between OWNER and CONTRACTOR concerning the Work consist of the following:

8.1 This Agreement.

8.2 Exhibits to this Agreement.

8.3 Performance and Payment Bonds.

8.4 Notice of Award.

8.5 Notice to Proceed.

8.6 General Requirements.

8.7 Supplementary Requirements

8.8 Project Funding – City of Galena

8.9 Specifications bearing the title:

GRANT PARK OVAL GARDEN SPECIAL PROVISIONS TO SPECIFICATIONS

8.10 Drawings, consisting of sheets numbered 1-3, inclusive with each sheet bearing the following general title:

GRANT PARK OVAL GARDEN DETAILS

8.11 Addenda number ___ through ___ inclusive with each sheet bearing the following general title:

GRANT PARK OVAL GARDEN ADDENDA

8.12 CONTRACTOR'S Bid and Bid Security.

8.13 Documentation submitted by CONTRACTOR prior to Notice of Award.

8.14 The following which may be delivered or issued after the Effective Date of the Agreement and are not attached hereto: All Written Amendments and other documents amending, modifying, or supplementing the Contract Documents.

8.15 There are no Contract Documents other than those listed above in this Article 8. The Contract Documents may only be amended, modified or supplemented as provided in paragraphs 3.5 and 3.6 of the General Conditions.

9. Miscellaneous

9.1 Terms used in this Agreement which are defined in Article 1 of the General Conditions will have the meanings indicated in the General Conditions.

9.2 No assignment by a party hereto of any rights under or interests in the Contract Documents will be binding on another party hereto without the written consent of the party sought to be bound; and specifically but without limitation moneys that may become due and moneys that are due may not be assigned without such consent (except to the extent that the effect of this restriction may be limited by law), and unless specifically stated to the contrary in written consent to an assignment no assignment will release or discharge the assignor from any duty or responsibility under the Contract Documents.

9.3 OWNER and CONTRACTOR each binds itself, its partners, successors, assigns and legal representatives in respect of all covenants, agreements and obligations contained in the Contract Documents.

IN WITNESS WHEREOF, OWNER and CONTRACTOR have signed this agreement in triplicate. One counterpart each has been delivered to OWNER, CONTRACTOR and ENGINEER. All portions of the Contract Documents have been signed or identified by OWNER and CONTRACTOR or by ENGINEER on their behalf.

This Agreement will be effective on **……. 2018.**

OWNER	CONTRACTOR
City of Galena	
By _____	By _____
Mayor	
(Corporate Seal)	(Corporate Seal)
Attest _____	Attest _____
Address for giving notices:	Address for giving notices:
City of Galena 101 Green Street Galena, IL 61036	
(If OWNER is a public body, attach evidence of authority to sign and resolution or other documents authorizing execution of Agreement.)	License No. _____ Agent for service of process _____ (If CONTRACTOR is a Corporation, attach evidence of authority to sign.)

NOTICE OF AWARD

Dated: …….

To: ……

OWNER'S Project No.: **NA**

Project: **GRANT PARK OVAL GARDEN**

Contract No: **N/A**

Contract for: **GRANT PARK OVAL GARDEN**

* *

You are notified that your Bid dated **…… 2018** for the above Contract has been considered. You are the apparent successful bidder and have been awarded a contract for

Base Bid

(Indicate total work, alternates or sections of Work awarded)

The Contract Price of your contract is **$.....**

Three copies of each of the proposed Contract Documents accompany this Notice of Award.

You must comply with the following conditions precedent within fifteen days of the date of this Notice of Award, that is by

1. You must deliver to the OWNER three fully executed counterparts of the Agreement.

2. You must deliver with the executed Agreement the Contract Security (Bonds as specified in the Instructions to Bidders (paragraph 17), General Conditions (paragraph 5.1), and Supplementary Conditions (paragraph SC-5.4)

3. List other conditions precedent: None.

Failure to comply with these conditions within the time specified will entitle OWNER to consider your bid abandoned, to annul this Notice of Award, and to declare your Bid Security forfeited.

Within ten days after you comply with those conditions, OWNER will return to you one fully signed counterpart of the Agreement.

City of Galena (Owner)

By: _____

(Authorized Signature - Mayor)

NOTICE TO PROCEED

Dated: **…….**

To: ……

OWNER'S Project No.: **NA**

Project: **GRANT PARK OVAL GARDEN CONSTRUCTION**

OWNER'S Contract No.: **N/A**

Contract for: **GRANT PARK OVAL GARDEN CONSTRUCTION**

* *

You are notified that the Contract Time under the above contract will commence on **Monday June 11, 2018**. By that date, you are to start performing your obligations under the Contract Documents. In accordance with Article 3 of the Agreement the dates of Substantial Completion will be **Wednesday, August 13, 2018**.

Before you may start any Work at the site, paragraph 2.7 of the General Conditions provides that you and OWNER must each deliver to the other (with copies to ENGINEER) certificates of insurance which each is required to purchase and maintain in accordance with the Contract Documents.

Also, before you may start any Work at the site, you must return two signed copies of this Notice to proceed to the ENGINEER of record.

_____
(CONTRACTOR)

_____
(Authorized signature)

_____
(Title)

City of Galena

By _____
(Authorized signature)

_____
(Title)

SUPPLEMENTARY CONDITIONS

These Supplementary Conditions amend or supplement the Standard General Conditions of the Construction Contract (No. 1910-8, 1990 Edition) and other provisions of the Contract Documents as indicated below. All provisions which are not so amended or supplemental remain in full force and effect.

SC-1

The terms used in these Supplementary Conditions which are defined in the Standard General Conditions of the Construction Contract (No. 1910-8, 1990 Edition) have the meanings assigned to them in the General Conditions.

SC 5.4

The limits of liability for the insurance required by Paragraph 5.4 of the General Conditions shall provide the following coverage's for not less than the following amounts or greater where required by Laws and Regulations:

5.4.1. and 5.4.2: Workers' Compensation, etc., under Paragraphs 5.4.1 and 5.4.2 of the General Conditions:

(1)	State:	Statutory
(2)	Applicable Federal (e.g., Longshoreman's):	Statutory
(3)	Employer's Liability	Bodily Injury by Accident - $1,000,000 Each Accident Bodily Injury by Disease - $1,000,000 Each Employee Bodily Injury by Disease - $1,000,000 Policy Limit

5.4.3, 5.4.4, and 5.4.5: Contractor's Liability Insurance under Paragraphs 5.4.3 through 5.4.5 of the General Conditions which shall also include completed operations and product liability coverage's:

(1)	General Aggregate (except products-completed operations)	$3,000,000
(2)	Products-Completed Operations Aggregate	$1,000,000
(3)	Personal and Advertising Injury (per person/organization)	$1,000,000

(4)	Each Occurrence (bodily injury and property damage	$1,000,000
(5)	Property Damage Liability insurance will provide explosion, collapse, and underground coverage's which applicable	Provide X, C, U Standard
(6)	Excess Liability:	
	General Aggregate	$3,000,000
	Each Occurrence	$1,000,000

5.4.6: Automobile Liability:

Combined Single Limit (bodily injury and property damage)	$1,000,000 each accident

SC 5.6

Delete Paragraph 5.6 of the General Conditions in its entirety and insert the following in its place.

5.6 CONTRACTOR shall purchase and maintain property insurance upon the Work at the site in the amount of the full replacement cost thereof (subject to such deductible amounts as may be provided in these Supplementary Conditions or required by Laws and Regulations). This insurance shall:

5.6.1 Include the interests of OWNER, CONTRACTOR, Subcontractors, ENGINEER, ENGINEER's Consultants and any other person or entities identified in the Supplementary Conditions, each of whom is deemed to have an insurable interest and shall be listed as an insured or additional insured;

5.6.2 Be written on a Builder's Risk "all-risk" or open peril or special causes of loss policy form that shall at least include insurance for physical loss and damage to the Work, temporary buildings, false work and Work in transit and shall insure against at least the following perils: fire, lightning, extended coverage, theft, vandalism and malicious mischief, earthquake, collapse, debris removal, demolition occasioned by enforcement of Laws and Regulations, water damage, and such other perils as may be specifically required by the Supplementary Conditions.

5.6.3 Include expenses incurred in the repair or replacement of any insured property (including but not limited to fees and charges of engineers and architects);

5.6.4 Cover materials and equipment in transit for incorporation in the Work or stored at the site or at another location that was agreed to in writing by OWNER prior to being incorporated in the Work, provided that such materials and equipment have been included in an Application for Payment recommended by ENGINEER; and

5.6.5 Be maintained in effect until final payment is made unless otherwise agreed to in writing by OWNER, CONTRACTOR and ENGINEER with thirty days written notice to each other additional insured to whom a certificate of insurance has been issued.

The policies of insurance required to be purchased and maintained by CONTRACTOR in accordance with this paragraph 5.6 shall comply with the requirements of GC-5.8.

Revised 4/20/2018

GENERAL REQUIREMENTS

1. Drawings and Specifications

1.1 The intent of the Drawings and Specifications is that the Contractor shall furnish all labor, materials, tools, equipment, and transportation necessary for the lawful and proper execution of the Work in accordance with the latest edition of the **IDOT Standard Specifications for Road and Bridge Works, Standard General Conditions of the Construction Contract and City of Galena Specifications** unless otherwise specified, and all incidental work necessary to complete the Project in an acceptable manner, ready for lawful use, occupancy or operation by the City of Galena.

1.2 Figure dimensions on Drawings shall govern over scale dimensions, and detailed Drawings shall govern over general Drawings. Any discrepancies found between the Drawings and Specifications and site conditions or any inconsistencies or ambiguities in the Drawings or Specifications shall be immediately reported to the City Engineer, in writing, who shall promptly correct such inconsistencies or ambiguities in writing. Work done by the Contractor after his discovery of such discrepancies, inconsistencies or ambiguities shall be done at the Contractor's risk.

2. Materials, Services and Facilities

2.1 It is understood that, except as otherwise specifically stated in the specifications, the Contractor shall provide and pay for all materials, labor, tools, equipment, water, light, power, transportation, supervision, temporary construction of any nature, and all other services and facilities of any nature whatsoever necessary to execute, complete, and deliver the work within the specified time.

2.2 Materials and equipment shall be so stored as to insure the preservation of their quality and fitness for the Work. Stored materials and equipment to be incorporated in the Work shall be located so as to facilitate prompt inspection.

2.3 Manufactured articles, materials and equipment shall be applied, installed, connected, erected, used, cleaned and conditioned as directed by the manufacturer.

2.4 Materials, supplies and equipment shall be in accordance with samples submitted by the Contractor and approved by the Engineer.

2.5 Materials, supplies or equipment to be incorporated into the Work shall not be purchased by the Contractor or the Subcontractor subject to a chattel mortgage or under a conditional sale contract or other agreement by which an interest is retained by the seller.

3. Inspection and Testing

3.1 All materials and equipment used in the construction of the project shall be subject to adequate inspection and testing in accordance with generally accepted standards, and as may be further required and defined in the Contract Documents.

3.2 The Contractor shall provide at his expense the testing and inspection services required by this specification.

3.3 If the specifications, laws, ordinances, rules, regulations or orders of any public authority having jurisdiction require any work to specifically be inspected, tested, or approved by someone other than the Contractor, the Contractor will give the Engineer timely notice of readiness. The Contractor will then furnish the Engineer the required certificates of inspection, testing or approval.

3.4 Inspections, tests or approvals by the Engineer or others shall not relieve the Contractor from his obligations to perform the Work in accordance with the requirements of the Contract Documents.

3.5 The City Engineer and his representatives will at all times have access to the Work. The Contractor will provide proper facilities for such access and observation of the work and also for any inspection, or testing thereof.

3.6 If any Work is covered contrary to the written instructions of the City Engineer it must, if requested by the City Engineer, be uncovered for his observation and replaced at the Contractor's expense.

3.7 If the City Engineer considers it necessary or advisable that covered Work be inspected or tested by others, the Contractor, at the City Engineer's request, will uncover, expose or otherwise make available for observation, inspection or testing as the City Engineer may require, that portion of the Work in question, furnishing all necessary labor, materials, tools, and equipment. If it is found that such Work is defective, the Contractor will bear all the expenses of such uncovering, exposure, observation, inspection and testing and of satisfactory reconstruction. If, however, such Work is not found to be defective, the Contractor will be allowed an increase in the Contract Price or an extension of the Contract Time, or both, directly attributable to such uncovering, exposure, observation, inspection, testing and reconstruction and an appropriate Change Order shall be issued.

4. Surveys, Permits, Regulations

4.1 The Contractor shall hire, at his expense, a licensed surveyor to furnish all boundary surveys and establish all base line staking for locating all component parts of the Work together with a suitable number of bench marks adjacent to the Work.

4.2 From the information provided, unless otherwise specified, the Contractor shall develop and make all detail surveys needed for construction such as slope stakes, batter boards, stakes for pile locations and other working points, lines, elevations and cut sheets.

4.3 The Contractor shall carefully preserve bench marks, reference points and stakes and, in case of willful or careless destruction’s, he shall be charged with the resulting expense and shall be responsible for any mistakes that may be caused by their unnecessary loss or disturbance.

4.4 Permits and licenses of a temporary nature necessary for the prosecution of the Work shall be secured and paid for by the Contractor. The Contractor shall give all notices and comply with all laws, ordinances, rules and regulations bearing on the conduct of the Work as drawn and specified. If the Contractor observes that the Contract Documents are at variance therewith, he shall promptly notify the City Engineer in writing, and any necessary changes shall be adjusted as provided in "Changes in the Work".

5. Protection of Work, Property and Persons

5.1 The Contractor will be responsible for initiating, maintaining and supervising all safety precautions and programs in connection with the Work. He will take all necessary precautions for the safety of, and will provide the necessary protection to prevent damage, injury or loss to all employees on the Work and other persons who may be affected thereby, all the Work and all materials or equipment to be incorporated therein, whether in storage on or off the site, and other property at the site or adjacent thereto, including trees, shrubs, lawns, walks, pavements, roadways, structures and utilities not designated for removal, relocation or replacement in the course of construction.

5.2 The Contractor will comply with all applicable laws, ordinances, rules, regulations and orders of any public body having jurisdiction. He will erect and maintain, as required by the conditions and progress of the Work, all necessary safeguards for safety and protection. He will notify owners of adjacent utilities when prosecution of the Work may affect them. The Contractor will remedy all damage, injury or loss to any property caused, directly or indirectly, in whole or in part, by the Contractor, any subcontractor or anyone directly or indirectly employed by any of them or anyone for whose acts any of them be liable, except damage or loss attributable to the fault of the Contract Documents or to the acts or omissions of the Owner or the Engineer or anyone employed by either of them or anyone for whose acts either of them may be liable, and not attributable, directly or indirectly, in whole or in part, to the fault or negligence of the Contractor.

5.3 In emergencies affecting the safety of persons or the work or property at the site or adjacent thereto, the Contractor, without special instruction or authorization from the City Engineer or owner, shall act to prevent threatened damage, injury or loss. He will give the City Engineer prompt Written Notice of any significant changes in the Work or deviations from the specifications caused thereby, and a Change Order shall thereupon be issued covering the changes and deviations involved, provided that such emergency did not arise in whole or in part as a result of any act or omission of Contractor, any of its Subcontractors or any of the persons directly or indirectly employed by any of them.

6. Supervision

6.1 The Contractor will supervise and direct the work. He will be solely responsible for the means, methods, techniques, sequences and procedures of construction. The Contractor will employ and maintain on the Work a qualified supervisor or superintendent who shall have been designated in writing by the Contractor as the Contractor's representative at the site. The supervisor shall have full authority to act on behalf of the Contractor and all communications given to the supervisor shall be as binding as if given to the Contractor. The supervisor shall be present on the site at all times as required to perform adequate supervision and coordination of the Work.

7. Changes in the Work

7.1 The City of Galena may at any time, as the need arises, order changes within the scope of the Work without invalidating the Agreement.

7.2 The City Engineer, also may at any time, by issuing a Field Order, make changes in the details of the Work. The Contractor shall proceed with the performance of any changes in the work so ordered by the Engineer.

8. Correction of Work

8.1 The Contractor shall promptly remove from the premises all work rejected by the City Engineer for failure to comply with the Specifications, whether incorporated in the construction or not, and the Contractor shall promptly replace and re-execute the Work in accordance with the Specifications and without expense to the City of Galena and shall bear the expense of making good all work of other Contractors destroyed or damaged by such removal or replacement.

8.2 All removal and replacement Work shall be done at the Contractor's expense. If the Contractor does not take action to remove such rejected work within ten (10) days after receipt of Written Notice, the City of Galena may remove such Work and store the materials at the expense of the Contractor.

9. Insurance

9.1 The Contractor shall purchase and maintain such insurance as will protect him from claims set forth below which may arise out of or result from the Contractor's execution of the Work, whether such execution be by himself or by any Subcontractor or by anyone directly or indirectly employed by any of them or by anyone for whose acts any of them may be liable:

9.1.2 Claims under Worker's Compensation, disability benefit and other similar employee benefit acts;

9.1.3 Claims for damages because of bodily injury occupational sickness or disease, or death of his employees;

9.1.4 Claims for damages because of bodily injury, sickness or disease, or death of any person other than his employees;

9.1.5 Claims for damages insured by usual personal injury liability coverage which are sustained: (1) by any person as a result of an offense directly or indirectly related to the employment of such person by the Contractor, or (2) by any other person; and

9.1.6 Claims for damages because of injury to or destruction of tangible property, including loss or use resulting there from.

9.2 Certificates of Insurance acceptable to the City of Galena shall be filed with the City of Galena prior to commencement of the Work. These Certificates shall contain a provision that coverage's afforded under the policies will not be canceled unless at least fifteen (15) days prior Written Notice has been given to the City of Galena.

9.3 The Contractor shall procure and maintain, at his own expense, during the Contract Time, liability insurance as hereinafter specified:

9.3.1 Contractor's General Public Liability and Property Damage Insurance including vehicle coverage issued to the Contractor and protecting him from all claims for personal injury, including death, and all claims for destruction of or damage to property, arising out of or in connection with any operations under the Contract Documents, whether such operations be by himself or by any Subcontractor under him, or anyone directly or indirectly employed by the Contractor or by a Subcontractor under him. Refer to Supplementary Conditions for written limits of liability.

9.4 The contractor shall procure and maintain, at his own expense during the Contract Time, in accordance with the provisions of the laws of the state in which the Work is performed, Workmen's compensation Insurance, including occupational disease provisions for all of his employees at the site of the Project and in case any Work is sublet, the Contractor shall require such Subcontractor similarly to provide Workmen's compensation Insurance, including occupational disease provisions for all of the latter employees unless such employees are covered by the protection afforded by the Contractor. In case any class of employees engaged in hazardous work under this contract at the site of the project is not protected under Workmen's Compensation statute, the Contractor shall provide, and shall cause each subcontractor to provide, adequate and suitable insurance for the protection of his employees not otherwise protected.

9.5 The contractor shall secure, if applicable, "All Risk" type Builder's Risk Insurance for Work to be performed. Unless specifically authorized by the Owner, the amount of such insurance shall not be less than the Contract Price totaled in the Bid. The policy shall cover not less than the losses due to fire, explosion, hail, lightning, vandalism, malicious mischief, wind, collapse, riot, aircraft, and smoke during the Contract Time, and until the Work is accepted by the City of Galena. The policy shall name as the insured the Contractor and the City of Galena

10. Indemnification

10.1 The Contractor will indemnify and hold harmless the City of Galena and their agents and employees from and against all claims, damages, losses and expenses including attorney's fees arising out of or resulting from the performance of the Work, provided that any such claims, damage, loss or expense is attributable to bodily injury, sickness, disease or death, or to injury to or destruction of tangible property including the loss of use resulting there from; and is caused in whole or in part by any negligent or willful act or omission of the Contractor, any subcontractor, anyone directly or indirectly employed by any of them or anyone for whose acts any of them may be liable.

10.2 In any and all claims against the Owner or the Engineer, or any of their agents or employees, by any employee of the Contractor, any Subcontractor, anyone directly or indirectly employed by any of them, or anyone for whose acts of them may be liable, the indemnification obligation shall not be limited in any way by any limitation on the amount or type of damages, compensation or benefits payable by or for the Contractor or any Subcontractor under Workmen's Compensation Acts, Disability Benefit Acts or other employee benefits acts.

10.3 The obligation of the Contractor under this paragraph shall not extend to the liability of the Engineer, his agents or employees arising out of the preparation or approval of maps, Drawings, opinions, reports, surveys, Change Orders, designs or Specifications.

11. Engineer's Authority

11.1 The City Engineer shall act as the City of Galena's representative during the construction period. He shall decide questions which may arise as to quality and acceptability of materials furnished and Work performed. He shall interpret the intent of the Contract Documents in a fair and unbiased manner. The City Engineer will make visits to the site and determine if the Work is proceeding in accordance with the specifications.

12. Guarantee and Security

12.1 The Contractor shall guarantee all materials and equipment furnished and Work performed for a period of one (1) year from the date of Substantial Completion of the system that the completed system is free from all defects due to faulty materials or workmanship and the Contractor shall promptly make such corrections as may be necessary by reason of such defects including the repairs of any damage to other parts of the system resulting from such defects. The Owner will give notice of observed defects with reasonable promptness. In the event that the Contractor should fail to make such repairs, adjustments, or other Work that may be made necessary by such defects, the City of Galena may do so and charge the Contractor the cost thereby incurred.

12.2 A Performance Bond and a Payment Bond, each in the amount of one hundred percent (100%) of the contract price, with a corporate surety approved by the City of Galena, will be required for the faithful performance of the Contract. Attorneys-in-fact who sign Bid Bonds or Payment Bonds and Performance Bonds must file with each Bond a certified and effective dated copy of their power of attorney. Contractor shall guarantee the work for a period of one (1) year from date of final acceptance of the Work and the Performance Bond furnished by Contractor shall run for a like period.

12.3 The Performance Bond and Payment Bond shall be executed prior to construction in penal sums equal to the amount of the Contract Price, conditioned upon the performance by the Contractor of all undertakings, covenants, terms, conditions and agreements of the specifications and upon the prompt payment by the Contractor to all persons supplying labor and materials in the prosecution of the Work provided by the Contract Documents. Such Bonds shall be executed by the Contractor and a corporate bonding company licensed to transact business in the state in which the Work is to be performed and named on the current list of "Surety Companies Acceptable on Federal Bonds" as published in the Treasury Department Circular Number 570, in the amount of the bonds supplied by such surety to not exceed the maximum amount shown for such surety in such publications. The expense of these Bonds shall be borne by the Contractor.

13. Barricades

13.1 The Contractor shall erect barricades as required to protect traffic during the course of work in or along the traveled portion of a street, alley or highway. Approval for placement of barricades shall be obtained from the appropriate authority.

14. Periodic and Final Cleanup

14.1 From time to time or as may be ordered by the City Engineer and immediately after completion of the Work, the Contractor shall at his own expense clean up and remove all refuse and unused materials of any kind resulting from the Work. Upon failure to do so within five (5) working days after receipt of written request from the Owner, the Work may be done by the Owner and the cost thereof be charged to the Contractor. Upon completion of the Work, the Contractor shall remove all his equipment and put the area of the Work in a neat and clean condition and do all other cleaning required to complete the Work in a workmanlike manner, ready for use and satisfactory to the City Engineer and City of Galena.

15. Final Inspection

15.1 A meeting at the job site shall be arranged by the City Engineer for the purpose of Final Inspection. The Contractor's representative(s) in charge of overall field supervision will be required to attend. The purpose of the meeting shall be to determine whether the project is completed to the satisfaction of all parties. Any unsatisfactory items shall be documented in a letter to the Contractor for action. At this time the City of Galena will determine if the said alley will be open, as well as whether the issuance of the Building Occupancy permit will be approved.

16. Additional Work

16.1 All additional work to be in accordance with latest edition of IDOT Standard Specification for Road and Bridge Construction detailed in Section 109. No additional work can be completed without authorization from the City Engineer. Contractor will inform City immediately or within 24 hours of any proposed change to the contract. Payment method will be agreed before additional work is completed and be based on unit prices, agreed lump sum or force account with hours agreed immediately or within 24 hours of proposed work. Force Account Form (see example) detailing the hours for labor and equipment is to be completed and submitted to City for approval within 24 hours of the proposed work being identified. When force account work is completed a breakdown of the labor, equipment and materials costs described in Section 109.04 is to be submitted to the City. No payment for the force account work will be authorized until the breakdown sheet is received and approved.

Revised 4/10/2014

CITY OF GALENA
WORK CHANGE DIRECTIVE

THIS FORM MUST BE COMPLETED ON SAME DAY AS WORK IS AGREED AND/OR COMPLETED

WORKS ORDER # ……. **DATE:** …….

PROJECT NAME: ……

CONTRACTOR: ……

CONTRACTOR'S REPRESENTATIVE: …….

DESCRIPTION OF EXTRA WORK:

METHOD OF PAYMENT:

PAYMENT METHOD	**CHECK ONE**	**PAYMENT DETAILS (UNIT COSTS, AMOUNT)**
UNIT PRICES		
LUMP SUM		
FORCE ACCOUNT		USE EXTRA WORK ORDER / TIME AND MATERIAL RECORD FORM PER IDOT STANDARD SPECIFICATIONS

ESTIMATED/AGREED CHANGE IN CONTRACT PRICE AND CONTRACT TIME:

CONTRACT PRICE: $ ……..

CONTRACT TIME (DAYS): .....

COMMENTS – ADDITIONAL INFORMATION:

CITY OF GALENA REPRESENTATIVE:

……City Engineer
Signature and Title

CONTRACTORS REPRESENTATIVE

……
Signature and Title

WCR 2/26/10

GRANT PARK OVAL GARDEN CONSTRUCTION
SPECIAL PROVISIONS TO SPECIFICATIONS

These specifications supplement the latest editions of **"Standard Specifications for Water and Sewer Construction in Illinois", "IDOT Standard Specifications for Road and Bridge Works", "Standard General Conditions of the Construction Contract" and "City Specifications"**.

GENERAL NOTES:

1. **All work must be completed by Wednesday, August 13, 2018**
2. Unit cost for all new or replacement construction items will include for removal and disposal of all excavated material and site clearance of the existing tree, vegetation and other debris. The City may remove some plants from the garden prior to the construction commencement date.
3. Contractor to salvage, stack on pallets, and plastic wrap the Purington paver bricks from existing garden.
4. Unit cost for 5-inch-thick sidewalk Alternate will include for minimum of 4-inch-thick aggregate base, with expansion material at start and finish, and troweled control joints to match existing joints.
5. Unit cost for excavation will include for all excavation and filling operations as indicated on the drawings. If there is the need for additional fill material or disposal of excess excavated material it will be responsibility of the contractor to include these items in the unit cost.
6. All steel reinforcement to be epoxy coated.
7. All concrete surfaces to be sealed with two coats of high-solids sealer: first coat to be Sil-Act ATS 190 LV and second coat to be Diamond Clear (Euclid Chemical) or equal. Contractor to provide specification sheet.
8. Contractor is to include all traffic management and control, mobilization, bonds and insurance in their unit prices.
9. All ground disturbed during construction will be reinstated to its former condition.
10. Contractor is responsible for coordinating with all utilities regarding underground and overhead cables.
11. Erosion control items will be included in contract unit costs unless otherwise stated in bid items.
12. Contractor must provide an insurance certificate when bid is awarded which complies with all requirements specified in Supplementary Conditions. NOTE: These insurance requirements have recently been updated with increased coverage.
13. Refer also to all construction specifications listed in drawings and specification section of General Requirements.
14. **All inquiries and questions about the contract documents are to be in writing, preferably by email, sent to Matt Oldenburg – Deputy City Engineer at:** mjoldenburg@cityofgalena.org

TRAFFIC CONTROL

Contractor shall provide and include for all traffic controls, as needed, including: signage, barricades, cones, hazard warning lights and traffic control lights to allow safe working during day and night. All traffic control will be in accordance with IDOT Standard Specifications latest edition.

EROSION CONTROL

All erosion control is to comply with details indicated in the plans and specifications and also to standards required by Illinois EPA Storm Water Pollution Prevention Plan (SWPPP), if required. Contractor is to be responsible, unless otherwise noted in the contract, for completing SWPPP and all

related documentation, including but not limited to Notice of Intent, Daily Inspection Reports, Notice of Completion and all related fees.

ADDITIONAL WORK

All additional work to be in accordance with latest edition of IDOT Standard Specification for Road and Bridge Construction detailed in Section 109. No additional work can be completed without authorization from the City Engineer. Contractor will inform City immediately or within 24 hours of any proposed change to the contract. Payment will be agreed before additional work is completed and be based on unit prices, agreed lump sum or force account with hours agreed immediately or within 24 hours of proposed work. Force Account Form (see example) detailing the hours for labor and equipment is to be completed and submitted to City for approval within 24 hours of the proposed work being identified. When force account work is completed a breakdown of the labor, equipment and materials costs described in Section 109.04 is to be submitted to the City. No payment for the force account work will be authorized until the breakdown sheet is received and approved.

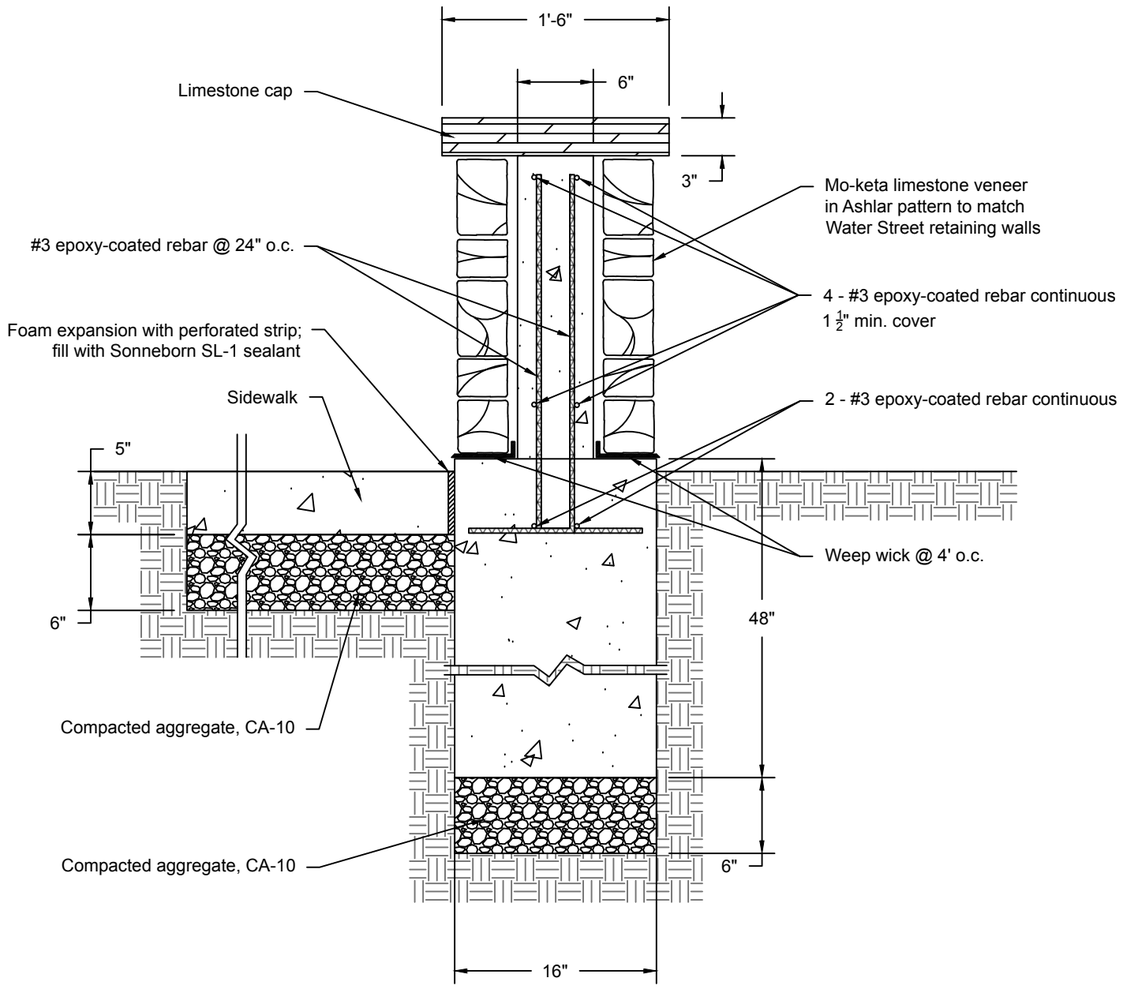

** All rebar shall be epoxy coated

DETAIL A: Veneer Stone Wall

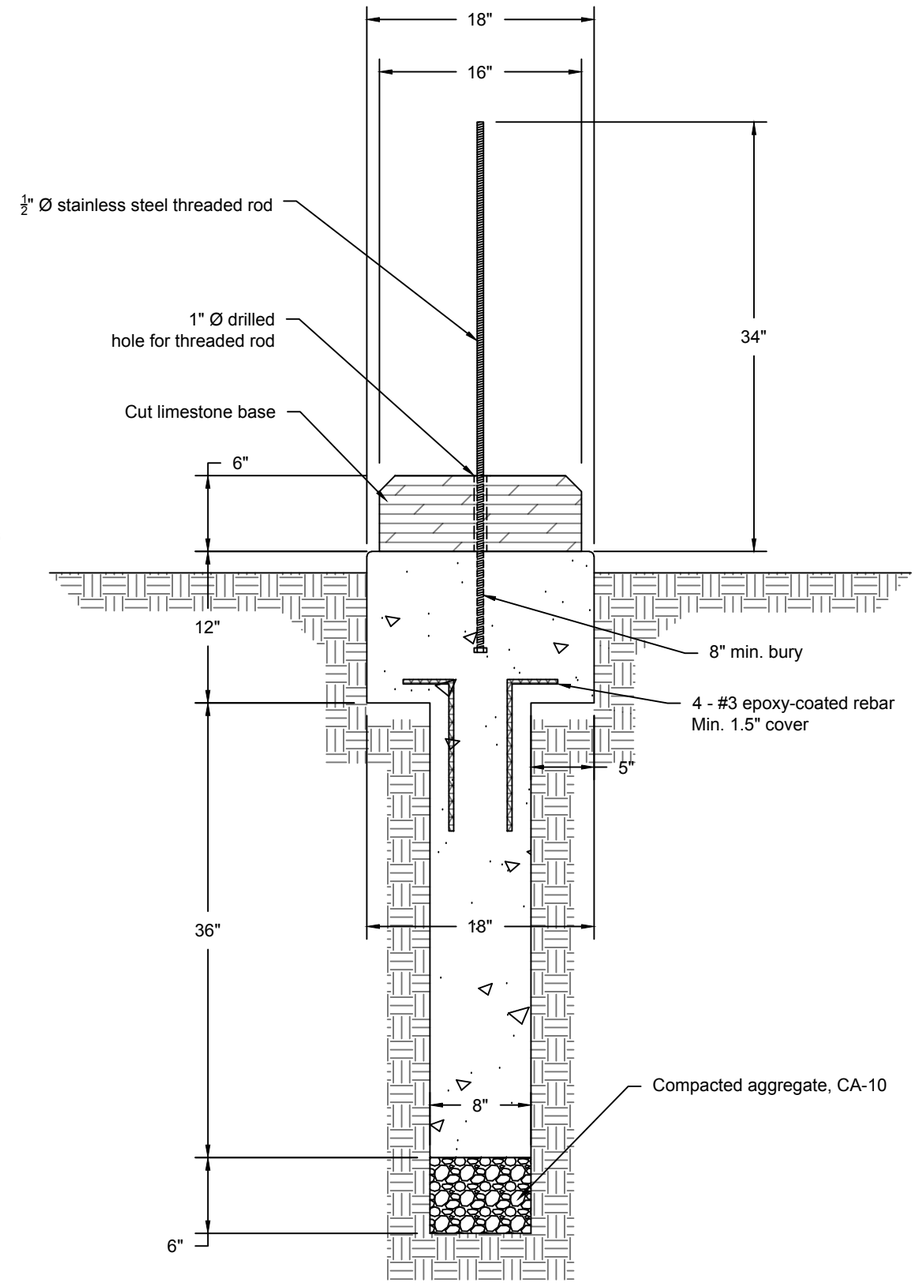

DETAIL B: Urn Stand Footing & Base

CITY OF GALENA
101 GREEN STREET
GALENA, IL 61036

DRAWN BY: MJO
CHECKED BY: CAL
SCALE: 1" = 1'

GRANT PARK OVAL GARDEN DETAILS

GALENA FOUNDATION IMPROVEMENTS
TO GRANT PARK – GALENA, IL

FILE NO.
OVAL2018

SHEET
1 OF 2

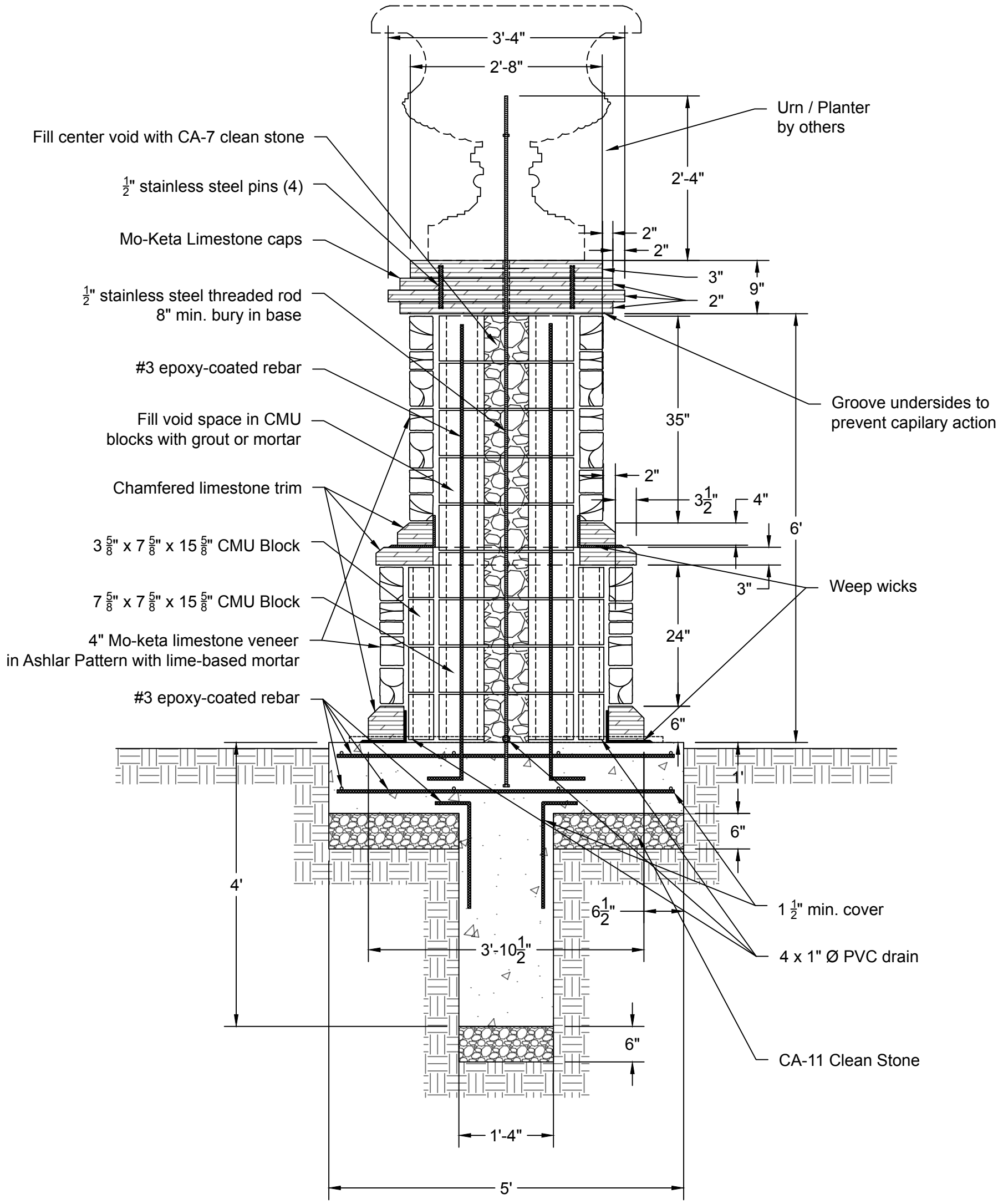

DETAIL C: Large Center Urn Stand Detail

SHEET 2 OF 2	FILE NO. OVAL2018	GRANT PARK OVAL GARDEN DETAILS	DRAWN BY: MJO	CITY OF GALENA 101 GREEN STREET GALENA, IL 61036
		GALENA FOUNDATION IMPROVEMENTS TO GRANT PARK – GALENA, IL	CHECKED BY: CAL	
			SCALE: 1" = 1.5'	

PLAN A

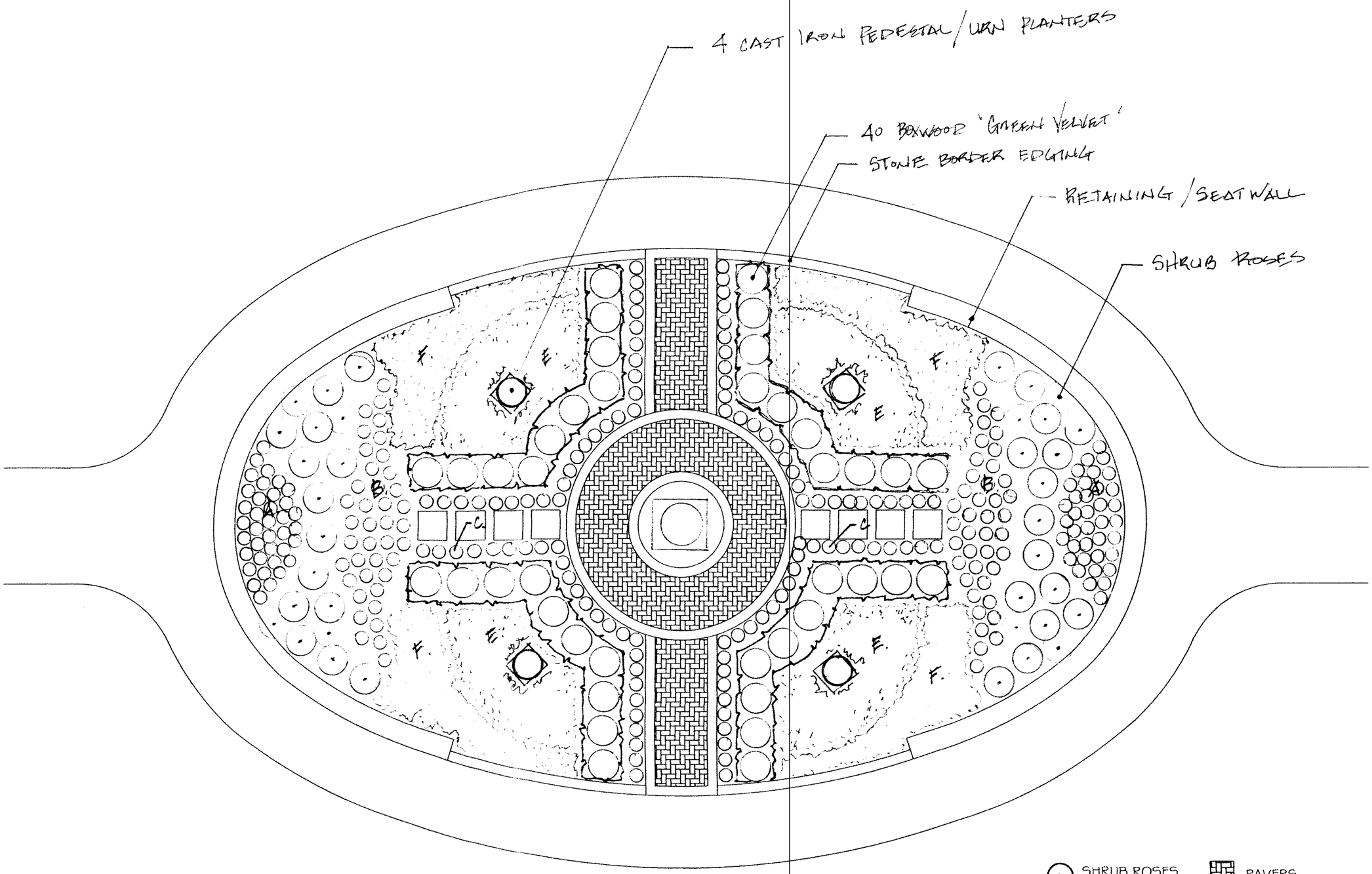

SHRUB ROSES
BOXWOOD HEDGE
PAVERS
ANNUALS
PERENNIALS
GROUNDCOVER

LICENSED LANDSCAPE ARCHITECT
DAVID J. GREIBE
157000108
STATE OF ILLINOIS

Grant Park Oval Garden

Galena, Illinois

SCALE
3/16" = 1'0"

NORTH

PROJECT
Grant Park

DRAWN EG
CHECKED DG

DATE
02.07.2018

SHEET TITLE
Option A

SHEET #
1 of 1

PROJECT #

Plan B

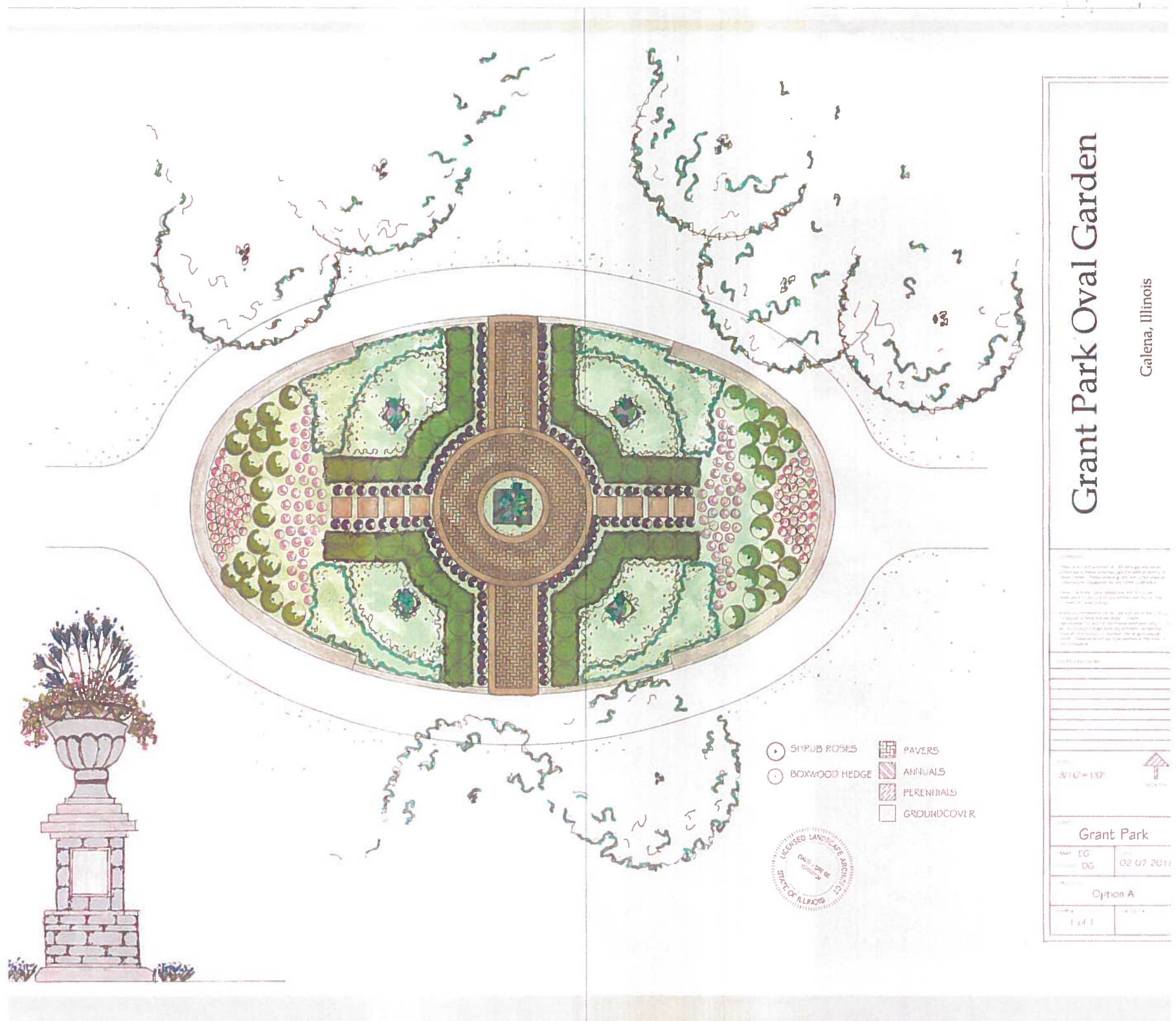
Grant Park Oval Garden
Galena, Illinois
SHRUB ROSES
BOXWOOD HEDGE
PAVERS
ANNUALS
PERENNIALS
GROUNDCOVER
LICENSED LANDSCAPE ARCHITECT
STATE OF ILLINOIS
Grant Park
EG
DG
02 07 2011
Option A
1 of 1